STATE OF ALASKA
DEPARTMENT OF NATURAL RESOURCES
DIVISION OF PARKS AND OUTDOOR RECREATION

KRSMA: FUNNY RIVER RIVERBANK PROTECTION
PROJECT No. 70139-1

IN COOPERATION WITH THE EXXON VALDEZ OIL SPILL TRUSTEE COUNCIL

Vicinity Map

SM, T05N, R09W, SEC 33

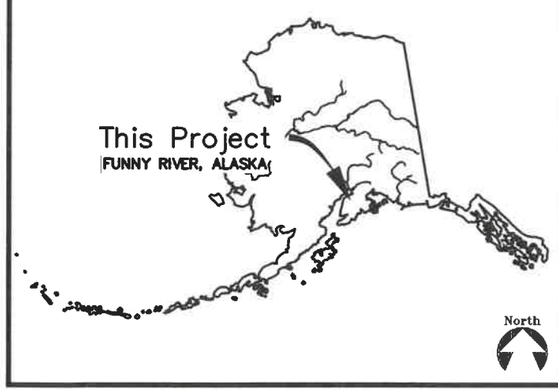

INDEX

1. TITLE SHEET
2. ESTIMATE OF QUANTITIES, LEGEND, AND ABBREVIATIONS
3. VICINITY MAP
4. EXISTING CONDITIONS
5. DEMOLITION PLAN
6. SITE PLAN
7. ELP WALKWAY PLAN & PROFILE
8. ELP WALKWAY TYPICAL SECTION AND ELEVATION DETAILS
9. ELP WALKWAY FRAMING PLAN
10. ELP WALKWAY DETAILS
11. ALUMINUM STAIRS DETAILS
12. LIFTING FRAME AND STAIR DETAILS
13. PILE COORDINATES AND DETAILS

The following Division of Parks & Outdoor Rec. standard drawings apply to this project: NONE
The following D.O.T.(Highways) standard drawings apply to this project: NONE

STATE OF ALASKA
Department of Natural Resources
Division of Parks & Outdoor Recreation

Recommended:

Ryan Miranda, P.E.
Chief, Design & Construction
2/28/23
Date

Approved:

Ricky Gease
Director, Alaska State Parks
2/28/23
Date

ESTIMATE OF QUANTITIES

BASIC BID

ITEM NO.	ITEM DESCRIPTION	UNIT	QUANTITY
202.0001.0000	REMOVAL OF STRUCTURES AND OBSTRUCTIONS	L.S.	ALL REQ'D
505.0005.0008	FURNISH STRUCTURAL STEEL PILES (8-INCH)	L.F.	476
505.0006.0008	DRIVE STRUCTURAL STEEL PILES (8-INCH)	EACH	17
622.2012.0000	ELP WALKWAY	S.F.	209.2
622.2012.0001	RIVER ACCESS STAIR TREAD	EACH	9
640.0001.0000	MOBILIZATION AND DEMOBILIZATION	L.S.	ALL REQ'D
641.0001.0000	EROSION, SEDIMENT AND POLLUTION CONTROL ADMINISTRATION	L.S.	ALL REQ'D
641.0002.0000	TEMPORARY EROSION, SEDIMENT AND POLLUTION CONTROL	C.S.	ALL REQ'D
641.0006.0000	WITHHOLDING	C.S.	ALL REQ'D
642.0001.0000	CONSTRUCTION SURVEYING	L.S.	ALL REQ'D
642.0003.0000	THREE PERSON SURVEY PARTY	HOUR	5
643.0002.0000	TRAFFIC MAINTENANCE	L.S.	ALL REQ'D
647.2006.0000	HYDRAULIC EXCAVATOR, 1 CY, 100HP MINIMUM	HOUR	5

LEGEND

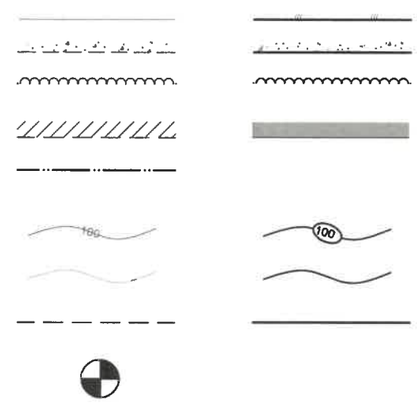

ABBREVIATIONS

ø	DIAMETER
℄	CENTERLINE
AC	ASPHALT CONCRETE
ADD. ALT.	ADDITIVE ALTERNATIVE
C.F.	CUBIC FOOT
C.S.	CONTINGENT SUM
C.Y.	CUBIC YARD
E	EAST
ELEV.	ELEVATION
ELP	ELEVATED LIGHT-PENETRATING
IN	INCH
INV	INVERT
KRSMA	KENAI RIVER SPECIAL MANAGEMENT AREA
L.S.	LUMP SUM
LB/LBS	POUND/POUNDS
MP	MILEPOST
N	NORTH
NE	NORTHEAST
No.	NUMBER
NW	NORTHWEST
OC	ON CENTER
OHW	ORDINARY HIGH WATER
PCC	PORTLAND CEMENT CONCRETE
PVI	PROFILE VERTICAL CURVE INTERSECTION
QTY	QUANTITY
REQ'D	REQUIRED
SE	SOUTHEAST
S.F.	SQUARE FOOT
S.S.	STAINLESS STEEL
SW	SOUTHWEST
S.Y.	SQUARE YARD
TYP	TYPICAL
W	WEST

STATE OF ALASKA
49TH
Rys B. Miranda
CE - 11010
2/28/23
Registered Professional Engineer

STATE OF ALASKA, DEPARTMENT OF NATURAL RESOURCES
PLANS DEVELOPED BY: DIVISION OF PARKS AND OUTDOOR RECREATION
550 W 7TH AVE. SUITE 1340, ANCHORAGE, AK 99501 - 907.269.8731

ESTIMATE OF QUANTITIES, LEGEND, AND ABBREVIATIONS

KRSMA: FUNNY RIVER
RIVERBANK PROTECTION
PROJECT NO. 70139-1

ALASKA STATE PARKS

PREPARED: RBM
DRAWN: RBM
REVIEWED: D&C
DATE: FEBRUARY 2023

SHEET 2 **OF** 13 **SHEETS**

NOTE:
1. PARCEL DATA IS FROM THE KENAI PENINSULA BOROUGH GIS WEBSITE AND IS INTENDED FOR INFORMATIONAL PURPOSES ONLY.

STATE OF ALASKA, DEPARTMENT OF NATURAL RESOURCES
PLANS DEVELOPED BY: DIVISION OF PARKS AND OUTDOOR RECREATION
550 W 7TH AVE. SUITE 1340, ANCHORAGE, AK 99501 – 907.269.8731

KRSMA: FUNNY RIVER
RIVERBANK PROTECTION
PROJECT NO. 70139-1

VICINITY MAP

STATE OF ALASKA 49TH
Rys B. Miranda
CE – 11010
2/28/23
Registered Professional Engineer

PREPARED: RBM
DRAWN: RBM
REVIEWED: D&C
DATE: FEBRUARY 2023

SHEET 3 **OF** 13 **SHEETS**

NOTE:
1. TOPOGRAPHIC DATA IS FROM A SURVEY PERFORMED ON SEPTEMBER 21, 2022.

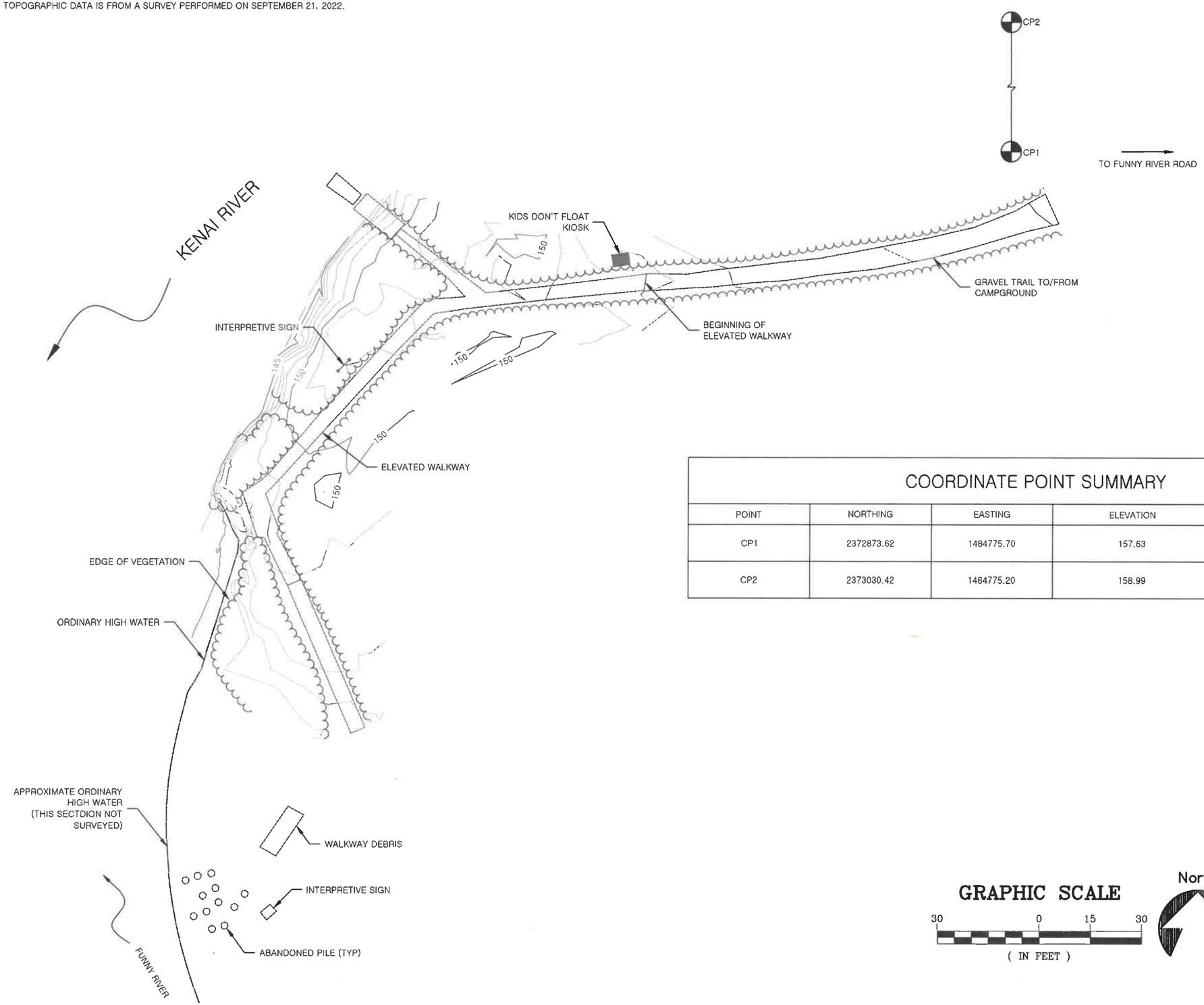

COORDINATE POINT SUMMARY

POINT	NORTHING	EASTING	ELEVATION	DESCRIPTION
CP1	2372873.62	1484775.70	157.63	REBAR W/ CAP
CP2	2373030.42	1484775.20	158.99	REBAR W/ CAP

GRAPHIC SCALE

30 0 15 30

(IN FEET)

North

STATE OF ALASKA 49TH
Rys B. Miranda
CE – 11010
2/28/23
Registered Professional Engineer

STATE OF ALASKA, DEPARTMENT OF NATURAL RESOURCES
PLANS DEVELOPED BY: DIVISION OF PARKS AND OUTDOOR RECREATION
550 W 7TH AVE. SUITE 1340, ANCHORAGE, AK 99501 – 907.269.8731

EXISTING CONDITIONS

KRSMA: FUNNY RIVER
RIVERBANK PROTECTION
PROJECT NO. 70139-1

ALASKA STATE PARKS

PREPARED: RBM
DRAWN: RBM
REVIEWED: D&C
DATE: FEBRUARY 2023

SHEET 4 **OF** 13 **SHEETS**

NOTES:
1. TOPOGRAPHIC DATA IS FROM A SURVEY PERFORMED ON SEPTEMBER 21, 2022.
2. BEGIN ELP WALKWAY DEMOLITION AT:
   N: 2372789.04
   E: 1484569.42
   THE ENGINEER SHALL APPROVE THE LOCATION PRIOR TO DEMOLITION.
3. PILES FOR REMOVAL MAY BE CUT 6 INCHES BELOW GRADE AND EMBEDDED PORTION LEFT IN PLACE AND BURRIED. EXISTING PILES IN CONFLICT WITH NEW PILES MUST BE REMOVED COMPLETELY. EXISTING PILE SIZES VARY FROM 4 INCH DIAMETER TO 8 INCH DIAMETER.

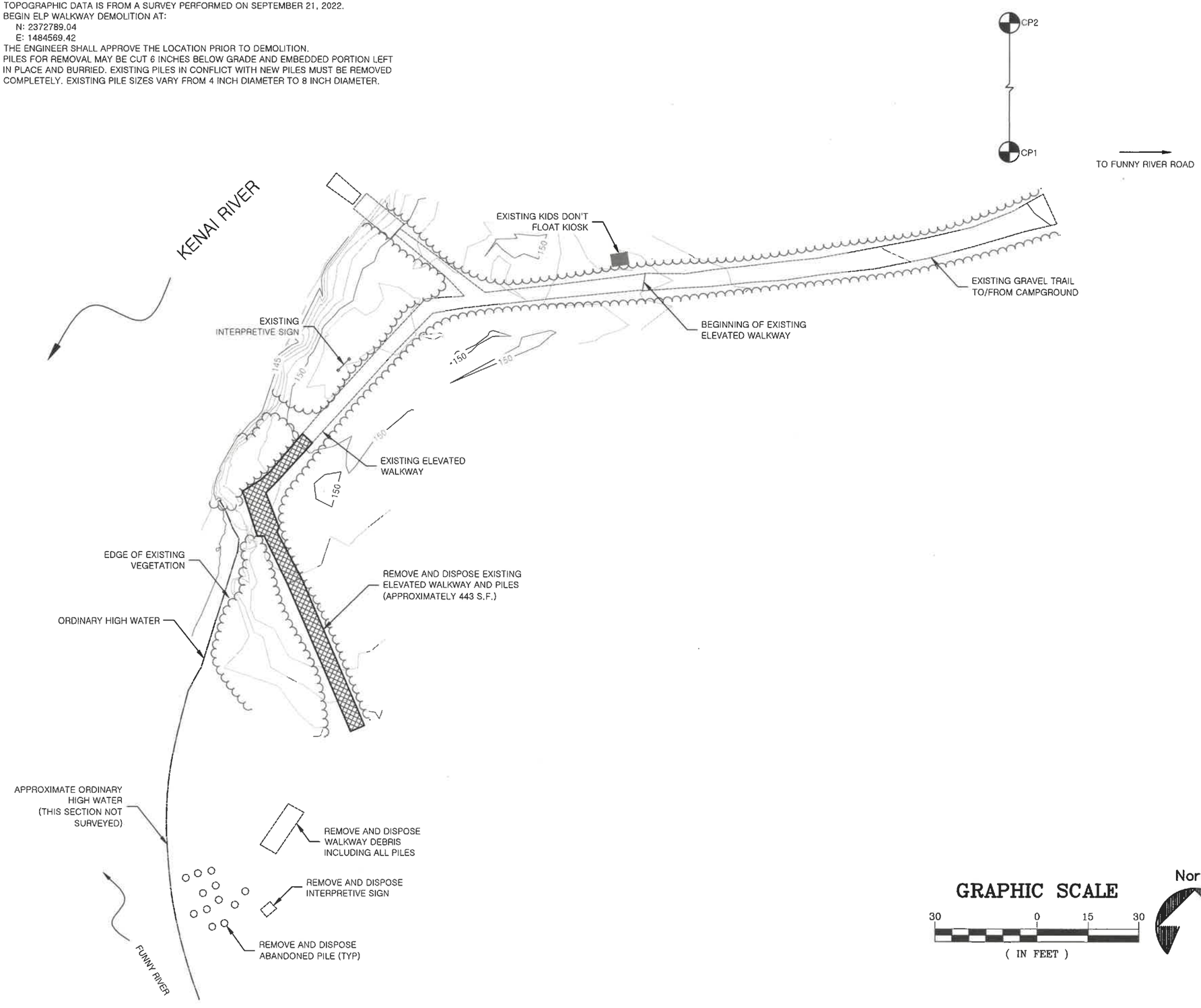

GRAPHIC SCALE

30 0 15 30

(IN FEET)

North

STATE OF ALASKA 49TH
Rys B. Miranda
CE - 11010
2/28/23
Registered Professional Engineer

STATE OF ALASKA, DEPARTMENT OF NATURAL RESOURCES
PLANS DEVELOPED BY: DIVISION OF PARKS AND OUTDOOR RECREATION
550 W 7TH AVE. SUITE 1340, ANCHORAGE, AK 99501 – 907.269.8731

DEMOLITION PLAN

KRSMA: FUNNY RIVER
RIVERBANK PROTECTION
PROJECT NO. 70139-1

ALASKA STATE PARKS

PREPARED: RBM
DRAWN: RBM
REVIEWED: D&C
DATE: FEBRUARY 2023

SHEET 5 **OF** 13 **SHEETS**

NOTE:
1. TOPOGRAPHIC DATA IS FROM A SURVEY PERFORMED ON SEPTEMBER 21, 2022.

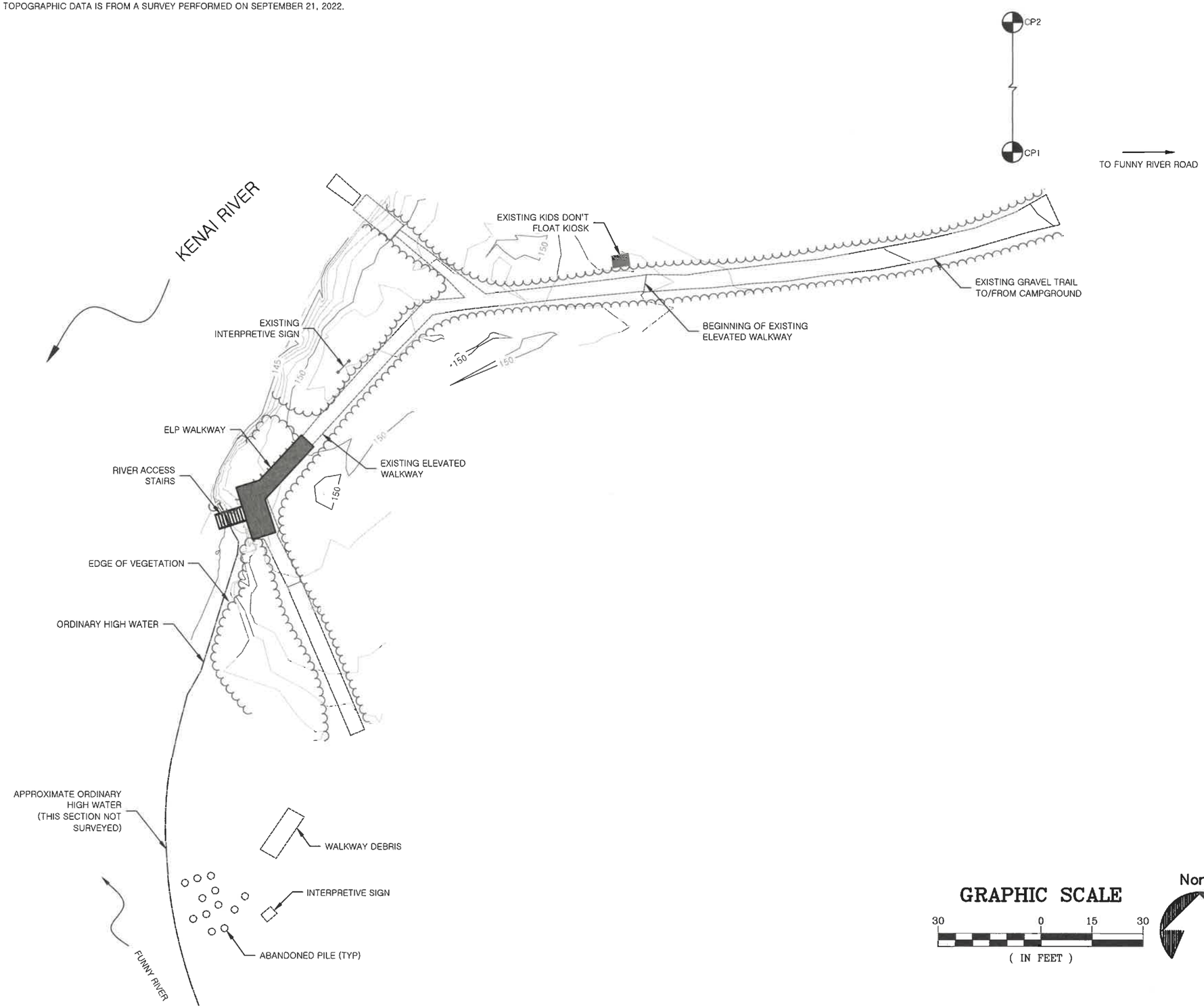

GRAPHIC SCALE

30 0 15 30

(IN FEET)

North

STATE OF ALASKA 49TH
Rys B. Miranda
CE — 11010
2/28/23
Registered Professional Engineer

STATE OF ALASKA, DEPARTMENT OF NATURAL RESOURCES
PLANS DEVELOPED BY: DIVISION OF PARKS AND OUTDOOR RECREATION
550 W 7TH AVE. SUITE 1340, ANCHORAGE, AK 99501 — 907.269.8731

SITE PLAN

KRSMA: FUNNY RIVER
RIVERBANK PROTECTION
PROJECT NO. 70139-1

ALASKA STATE PARKS

PREPARED: RBM
DRAWN: RBM
REVIEWED: D&C
DATE: FEBRUARY 2023

SHEET 6 **OF** 13 **SHEETS**

NOTES:
1. TOPOGRAPHIC DATA IS FROM A SURVEY PERFORMED ON SEPTEMBER 21, 2022.
2. FIELD VERIFY ORIGINAL GROUND DATA AND CATCH ELEVATION PRIOR TO FABRICATING RIVER ACCESS STAIRS.

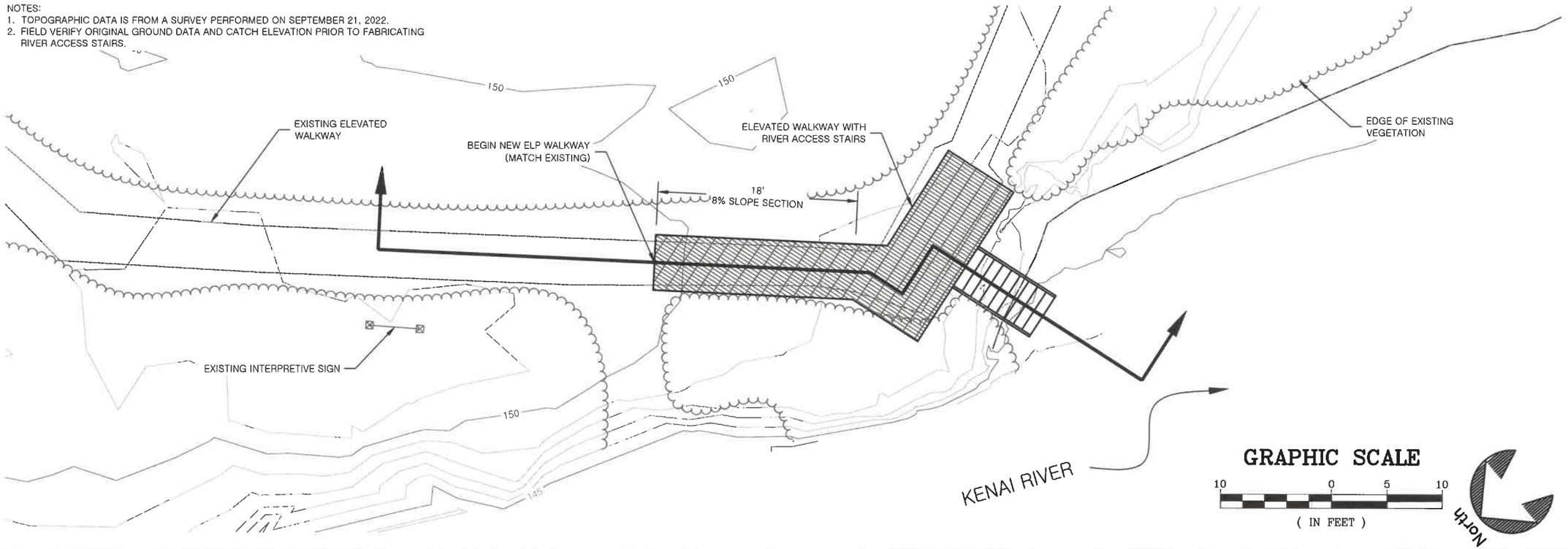

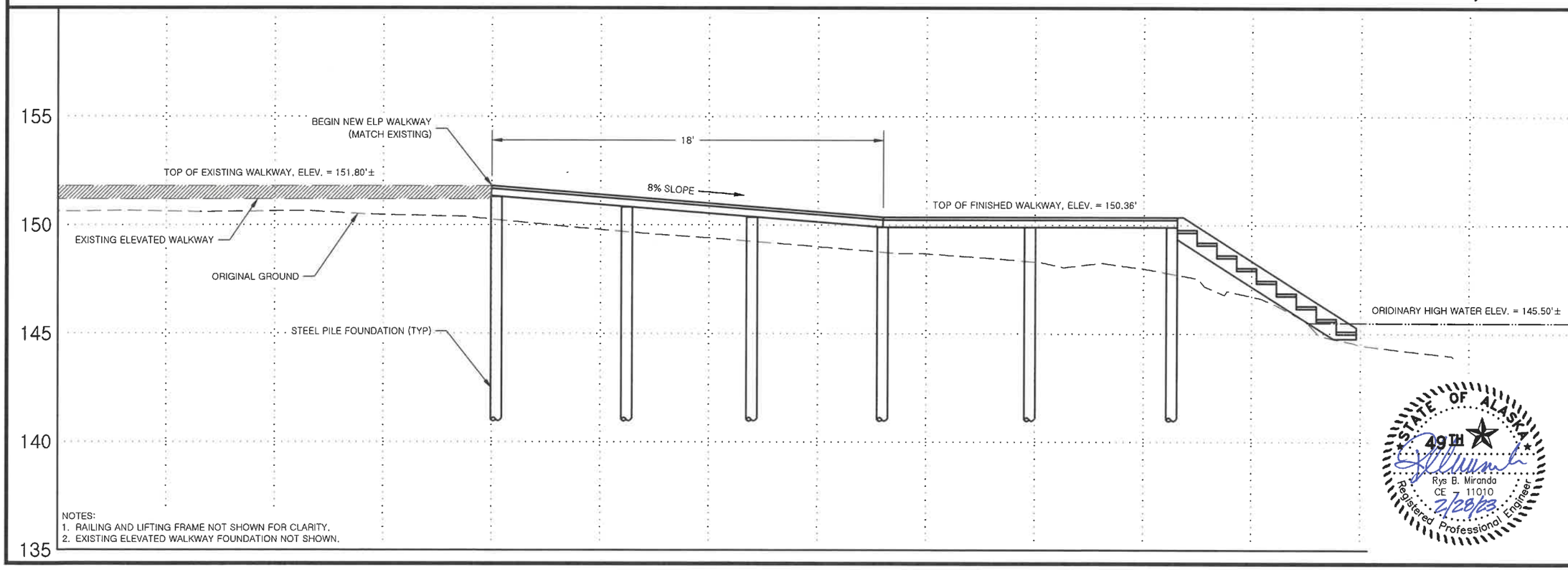

NOTES:
1. RAILING AND LIFTING FRAME NOT SHOWN FOR CLARITY.
2. EXISTING ELEVATED WALKWAY FOUNDATION NOT SHOWN.

STATE OF ALASKA
49TH
Rys B. Miranda
CE 11010
2/28/23
Registered Professional Engineer

STATE OF ALASKA, DEPARTMENT OF NATURAL RESOURCES
PLANS DEVELOPED BY: DIVISION OF PARKS AND OUTDOOR RECREATION
550 W 7TH AVE. SUITE 1340, ANCHORAGE, AK 99501 – 907.269.8731

ELP WALKWAY
PLAN AND PROFILE

KRSMA: FUNNY RIVER
RIVERBANK PROTECTION
PROJECT NO. 70139-1

ALASKA STATE PARKS

PREPARED: RBM
DRAWN: RBM
REVIEWED: D&C
DATE: FEBRUARY 2023

SHEET 7 **OF** 13 **SHEETS**

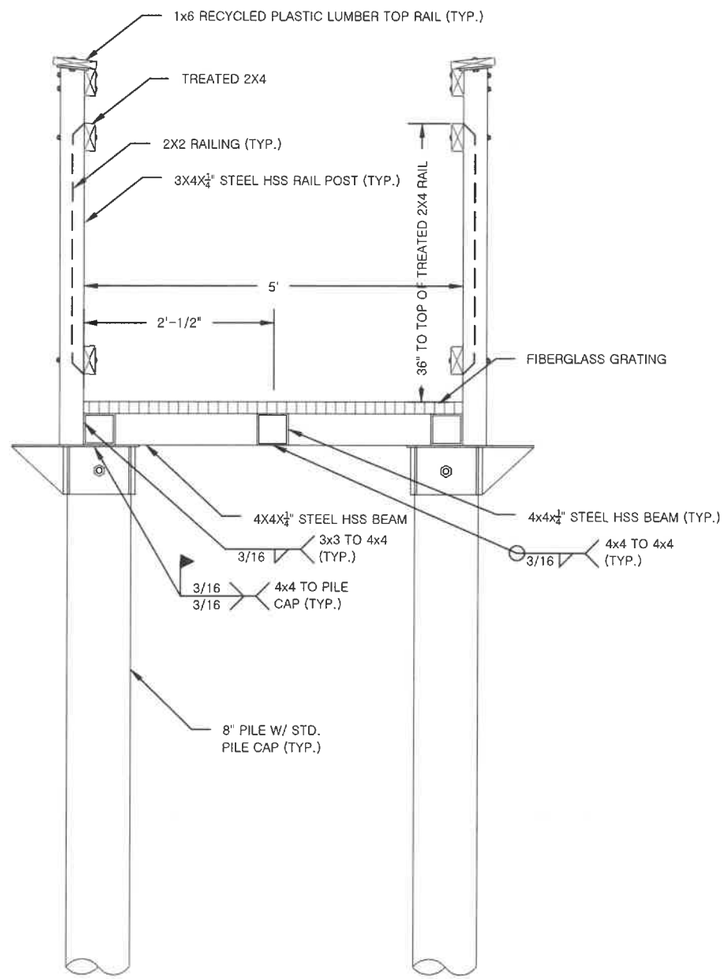

1/8 ELP WALKWAY
TYPICAL SECTION

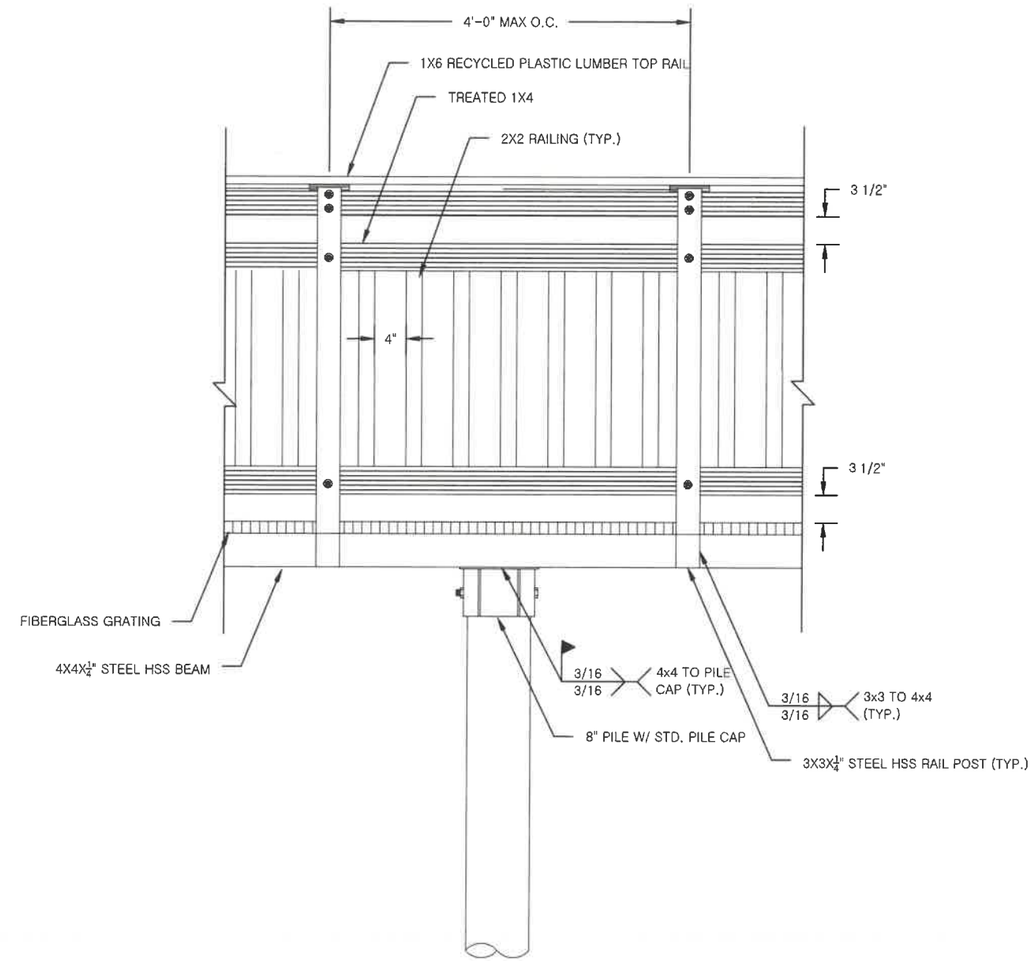

2/8 ELP WALKWAY
ELEVATION DETAIL

STATE OF ALASKA
49TH
Rys B. Miranda
CE - 11010
2/28/23
Registered Professional Engineer

STATE OF ALASKA, DEPARTMENT OF NATURAL RESOURCES
PLANS DEVELOPED BY: DIVISION OF PARKS AND OUTDOOR RECREATION
550 W 7TH AVE. SUITE 1340, ANCHORAGE, AK 99501 - 907.269.8731

ESP WALKWAY TYPICAL SECTION & ELEVATION DETAIL

KRSMA: FUNNY RIVER
RIVERBANK PROTECTION
PROJECT NO. 70139-1

PREPARED: CDC
DRAWN: CDC
REVIEWED: D&C
DATE: FEBRUARY 2023

SHEET 8 OF 13 SHEETS

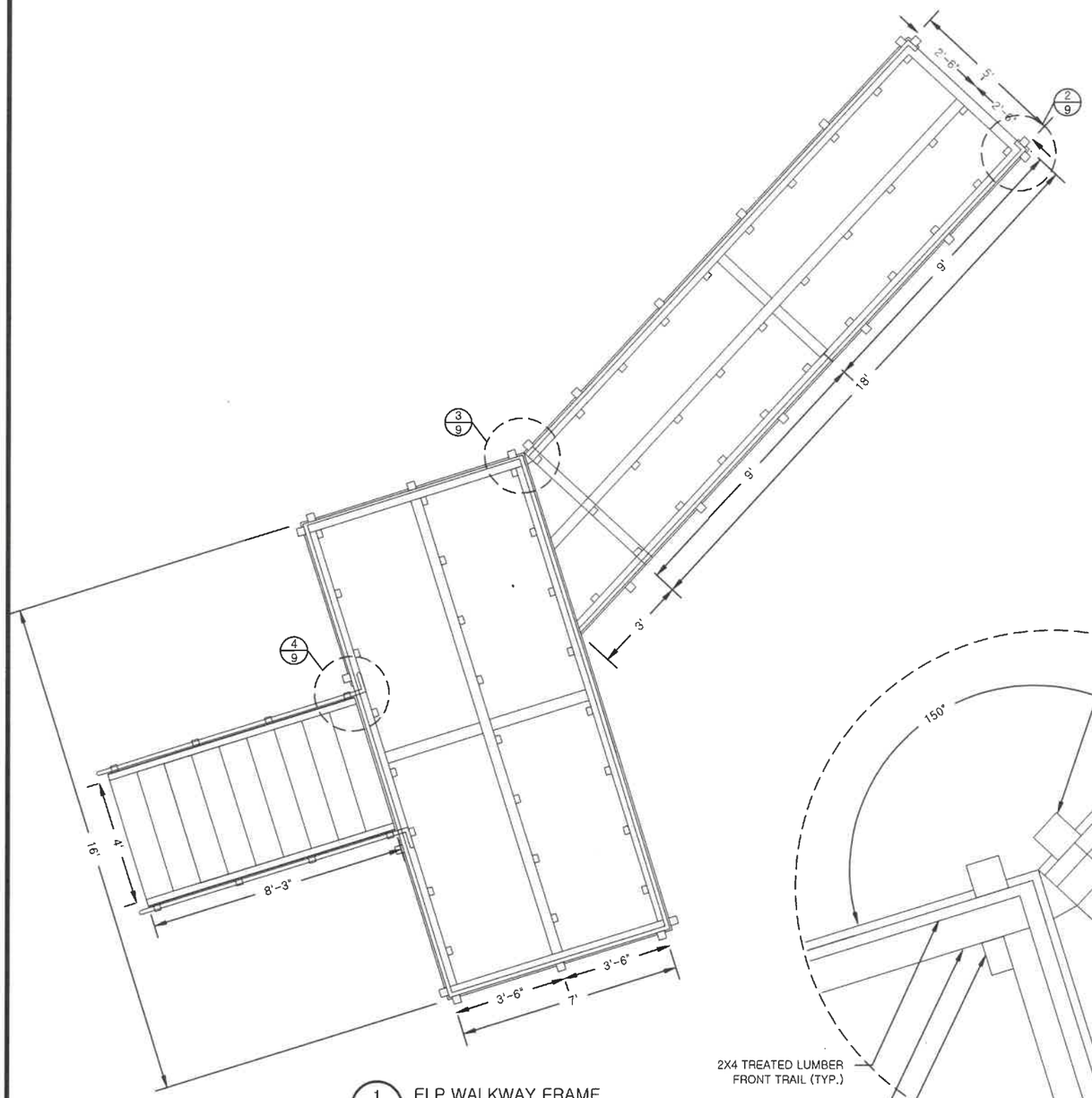

1/9 ELP WALKWAY FRAME
PLAN VIEW

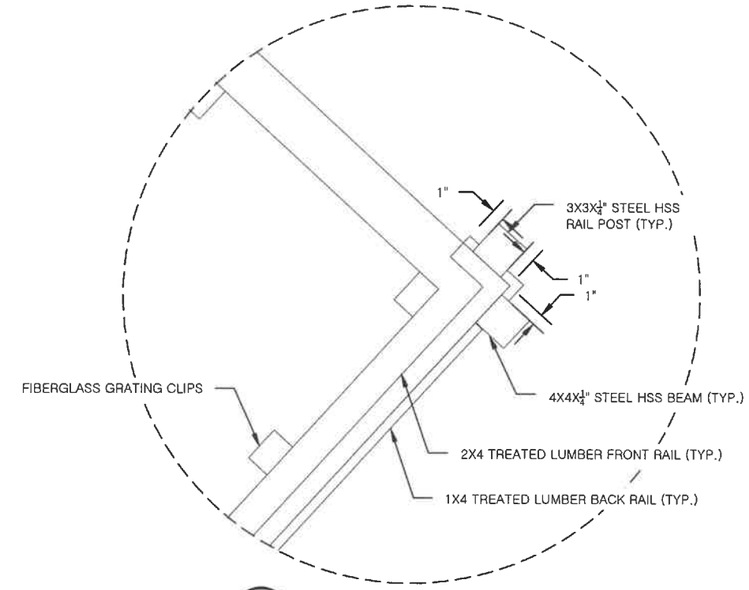

2/9 RAIL POST SPACING
RAMP END CORNER

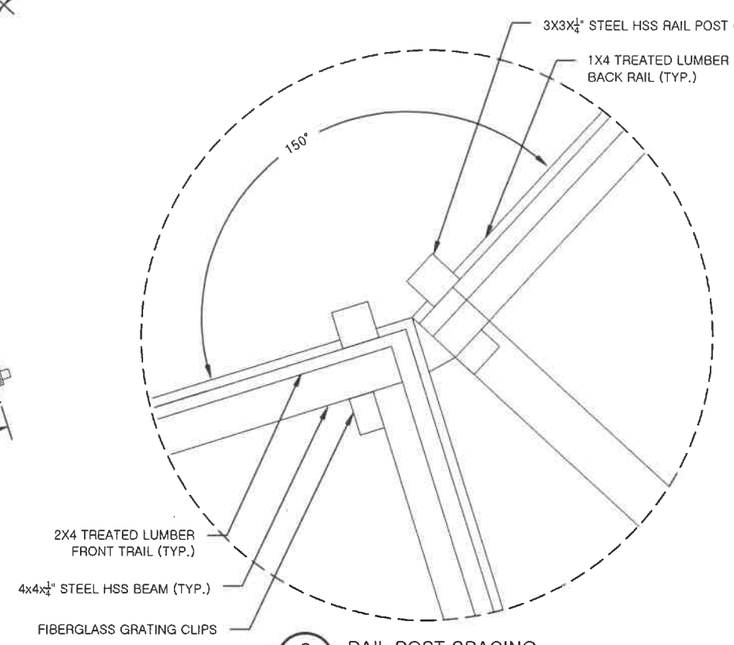

3/9 RAIL POST SPACING
RAMP INSIDE CORNER

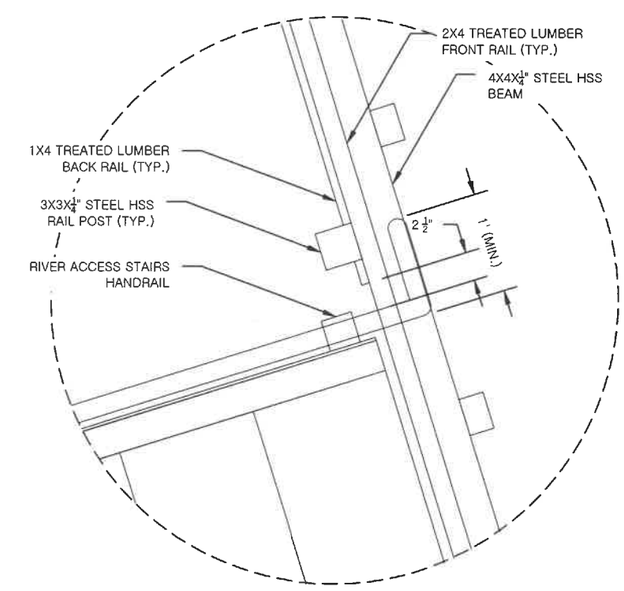

4/9 RAIL POST SPACING
STAIR CORNER

NOTES:
1. FIBERGLASS GRATING, RECYCLED PLASTIC LUMBER TOP RAIL, AND TREATED LUMBER BACK SIDE RAIL OMITTED FROM DETAIL VIEWS FOR CLARITY
2. RAIL POSTS SHALL BE SPACED EVENLY ALONG CONTINUOUS RUNS. SEE DETAIL 2/XX FOR MAXIMUM SPACING
3. FRAME CORNERS SHALL BE JOINED USING MITERED CORNERS

STATE OF ALASKA
49TH
Rys B. Mirando
CE 11010
2/28/23
Registered Professional Engineer

STATE OF ALASKA, DEPARTMENT OF NATURAL RESOURCES
PLANS DEVELOPED BY: DIVISION OF PARKS AND OUTDOOR RECREATION
550 W 7TH AVE. SUITE 1340, ANCHORAGE, AK 99501 - 907.269.8731

ELP WALKWAY FRAMING PLAN

KRSMA: FUNNY RIVER
RIVERBANK PROTECTION
PROJECT NO. 70139-1

PREPARED: CDC
DRAWN: CDC
REVIEWED: D&C
DATE: FEBRUARY 2023

SHEET
9
OF 13 SHEETS

NOTES:

1. PAIN EXPOSED ENDS OF RECYCLED PLASTIC LUMBER TOP RAIL W/ COLOR MATCHED PAINT
2. TOP RAILS SHALL BE INSTALLED FLUSH TO THE FACE OF THE FRONT SIDE RAIL. SIDE RAIL BENEATH TOP RAIL SHALL BE NOTCHED TO ENSURE TOP RAIL SITS FLUSH AGAINST SIDE RAIL.
3. CARE SHALL BE TAKEN TO ENSURE NO GAPS ARE PRESENT BETWEEN RECYCLED PLASTIC TOP RAIL AND FRONT SIDE RAIL. USE WOOD SHIMS TO FILL IN GAPS.

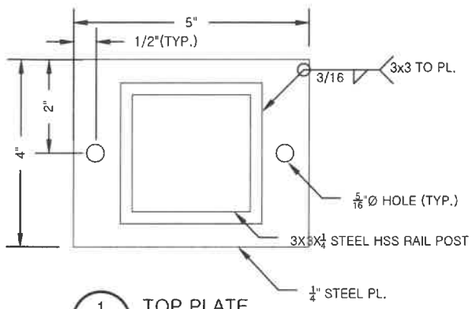

1/10 TOP PLATE DETAIL

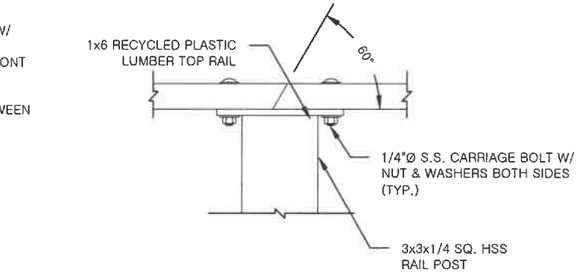

2/10 TOP RAIL CONNECTION DETAIL

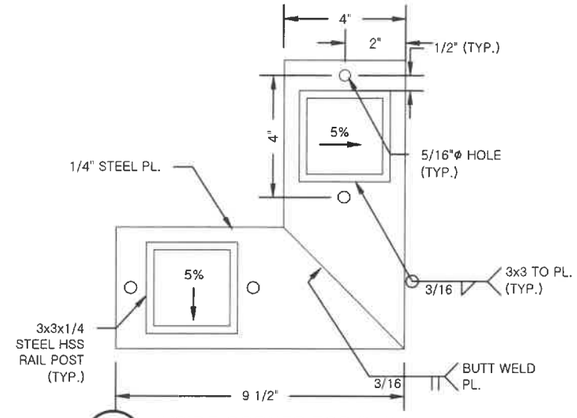

7/10 INSIDE CORNER TOP PLATE DETAIL

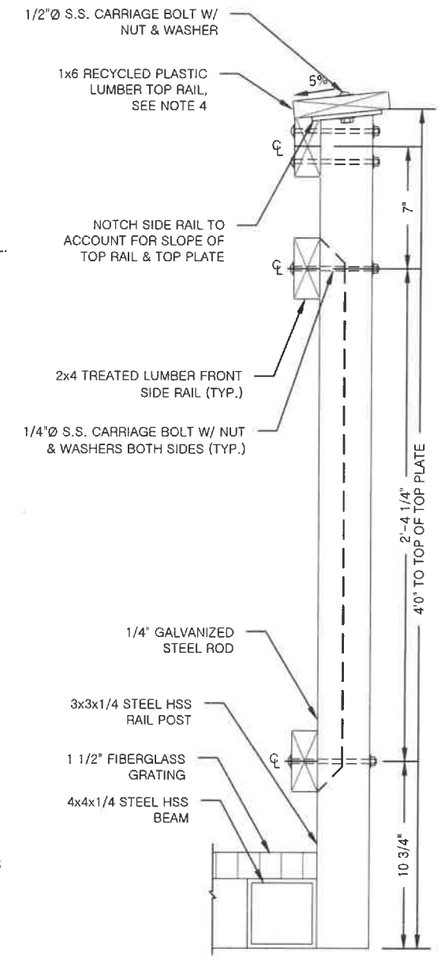

8/10 RAIL POST SECTION DETAIL

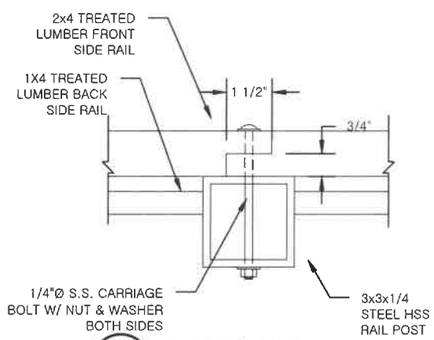

3/10 RABBET JOINT DETAIL

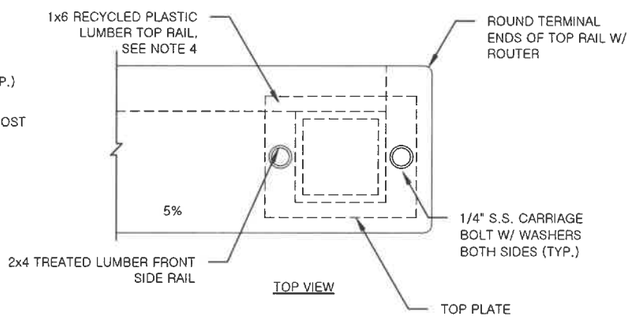

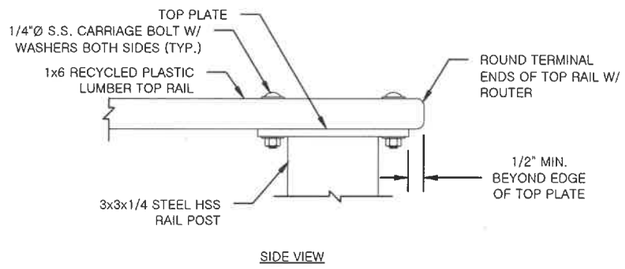

5/10 TOP RAIL & TOP PLATE DETAIL

5/10 TRANSITION CONNECTION DETAIL

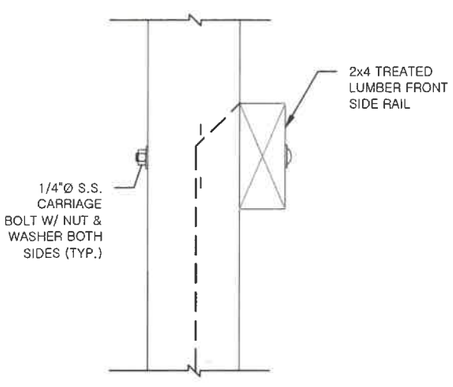

4/10 RAIL POST DETAIL

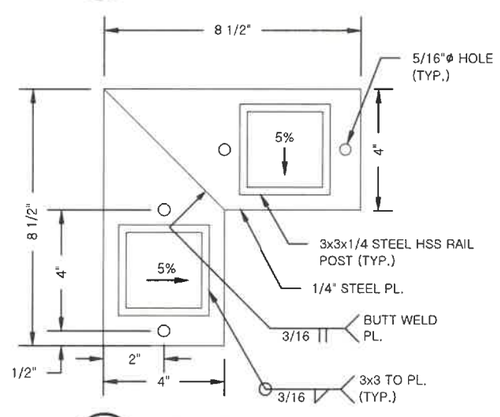

6/10 OUTSIDE CORNER TOP PLATE DETAIL

STATE OF ALASKA, DEPARTMENT OF NATURAL RESOURCES
PLANS DEVELOPED BY: DIVISION OF PARKS AND OUTDOOR RECREATION
550 W 7TH AVE. SUITE 1340, ANCHORAGE, AK 99501 - 907.269.8731

ELP WALKWAY DETAILS

KRSMA: FUNNY RIVER
RIVERBANK PROTECTION
PROJECT NO. 70139-1

PREPARED: CDC
DRAWN: CDC
REVIEWED: D&C
DATE: FEBRUARY 2023

STATE OF ALASKA 49TH
Rys B. Miranda
CE - 11010
2/28/23
Registered Professional Engineer

SHEET 10 OF 13 SHEETS

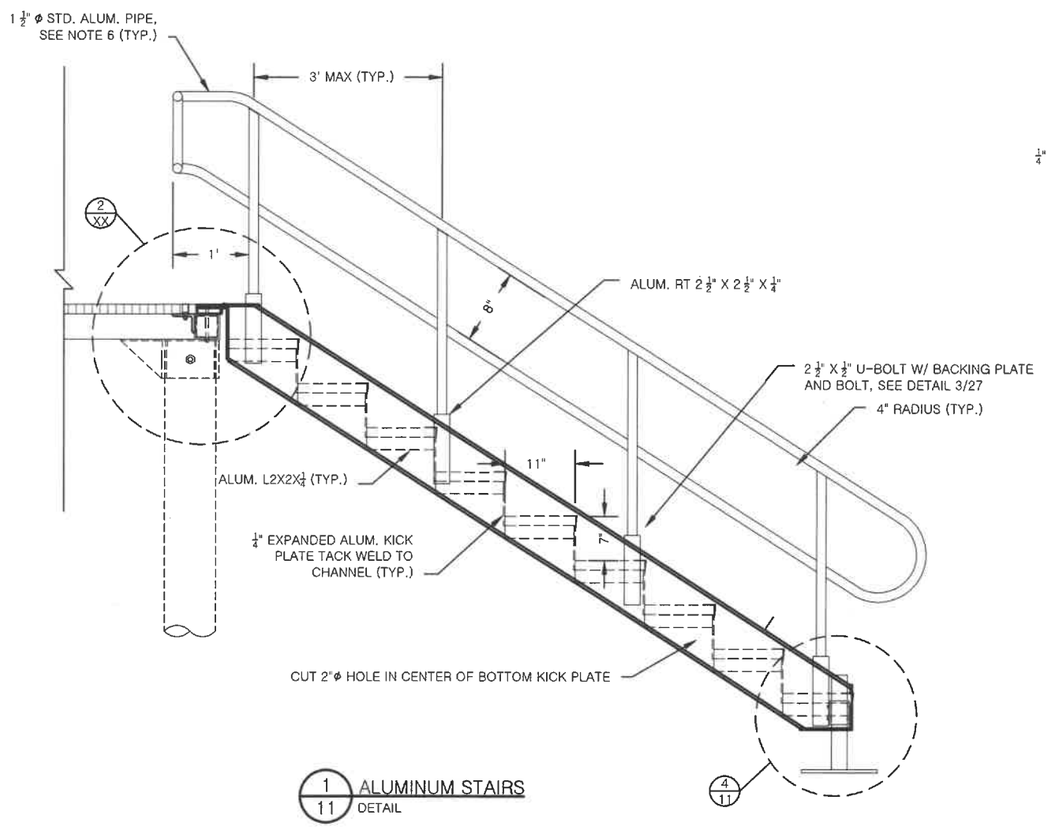

1/11 ALUMINUM STAIRS DETAIL

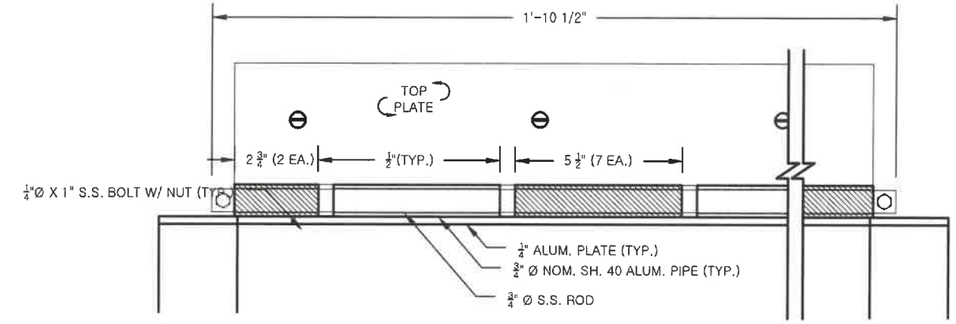

2/11 STAIR HINGE DETAIL

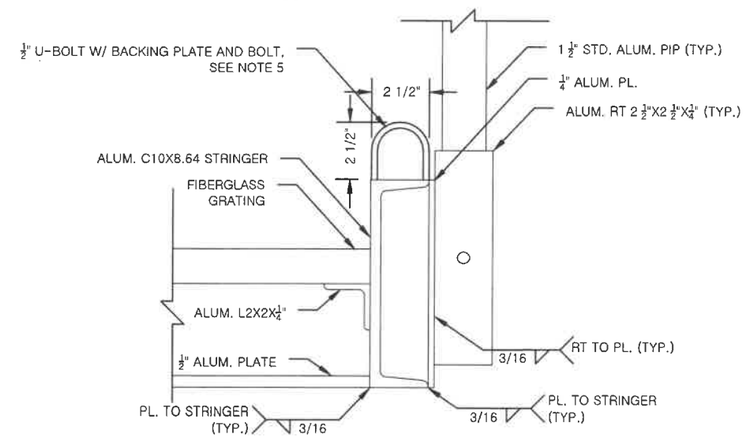

5/11 ALUMINUM STAIRS HANDRAIL CONNECTION DETAILS

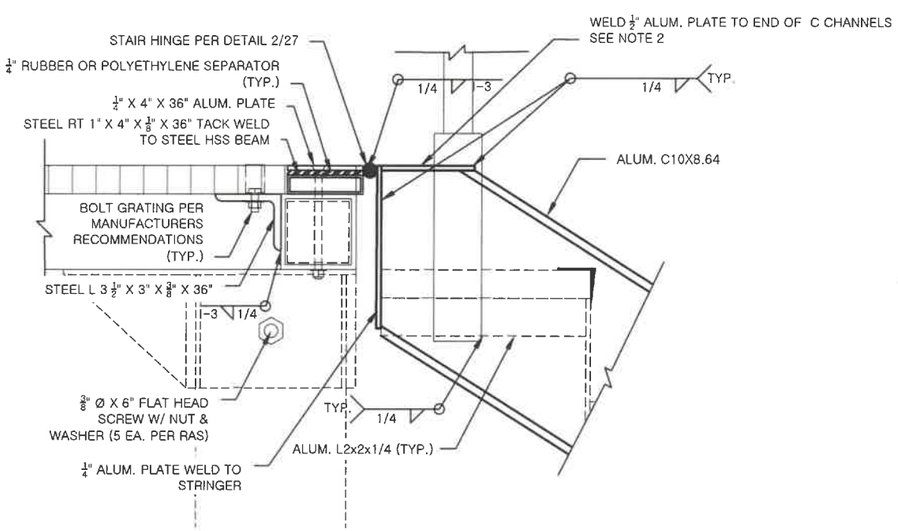

3/11 ALUMINUM STAIRS CONNECTION DETAIL

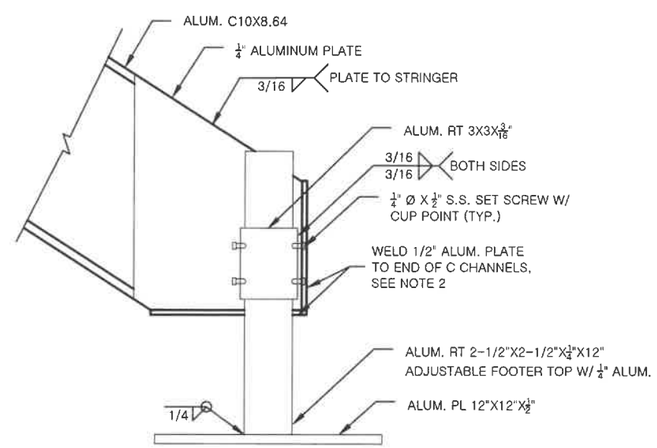

4/11 ALUMINUM STAIRS FOOTER DETAILS

STATE OF ALASKA 49TH Rys B. Miranda CE - 11010 2/28/23 Registered Professional Engineer

STATE OF ALASKA, DEPARTMENT OF NATURAL RESOURCES
PLANS DEVELOPED BY: DIVISION OF PARKS AND OUTDOOR RECREATION
550 W 7TH AVE. SUITE 1340, ANCHORAGE, AK 99501 - 907.269.8731

ALUMINUM STAIR DETAILS

FUNNY RIVER
RIVERBANK PROTECTION
PROJECT NO. 70139-1

PREPARED: CDC
DRAWN: CDC
REVIEWED: D&C
DATE: FEBRUARY 2023

SHEET 11 OF 13 SHEETS

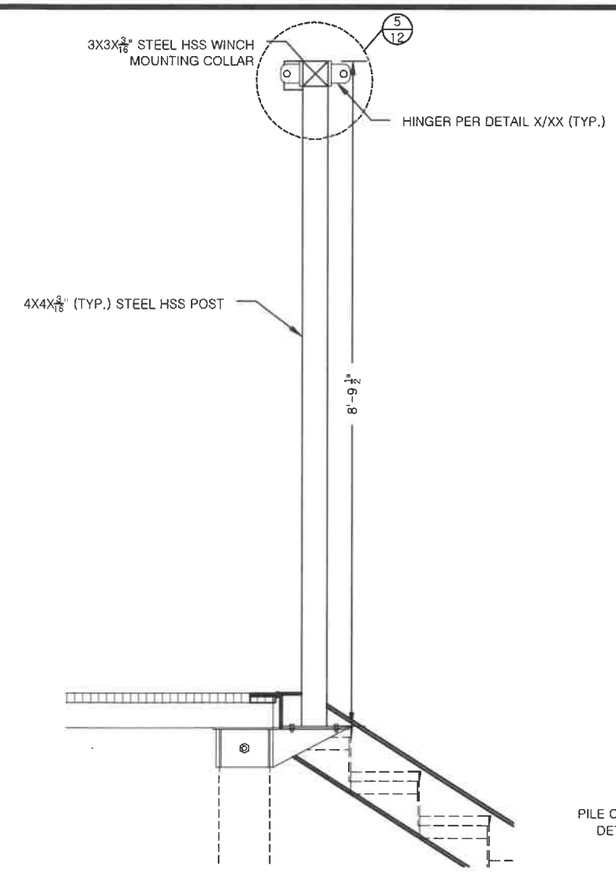

1/12 LIFTING FRAME DETAILS

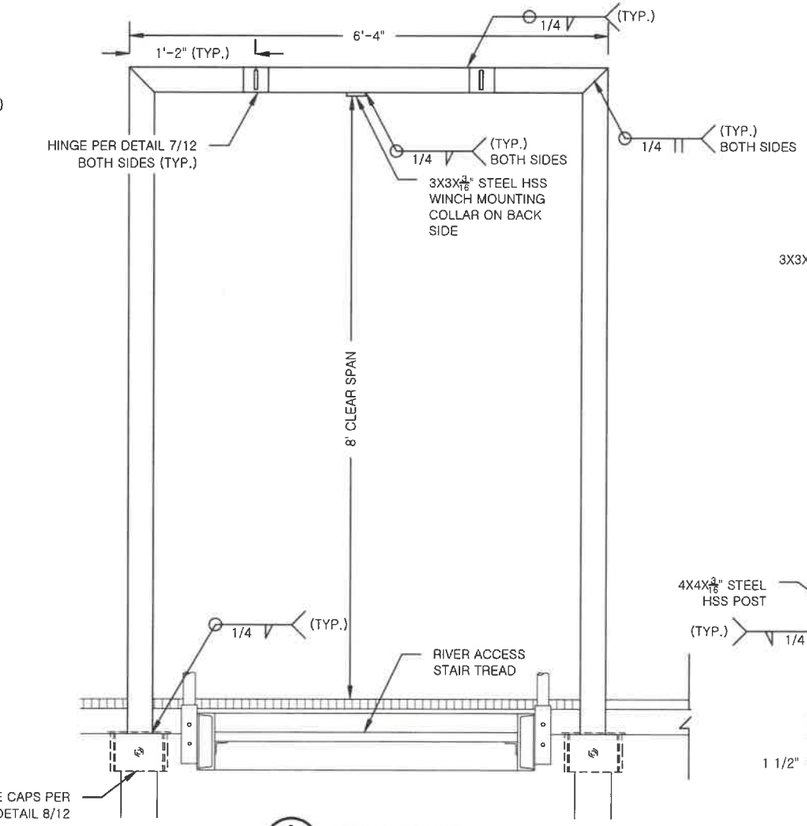

3/12 LIFTING FRAME BASE PLATE DETAILS

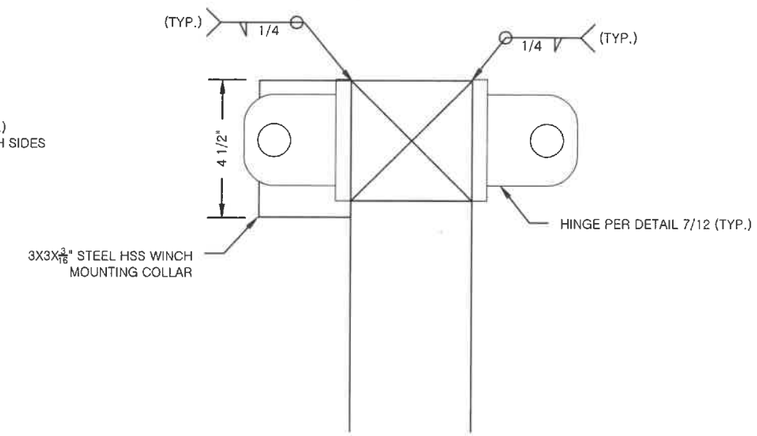

5/12 LIFTING FRAME TOP DETAILS

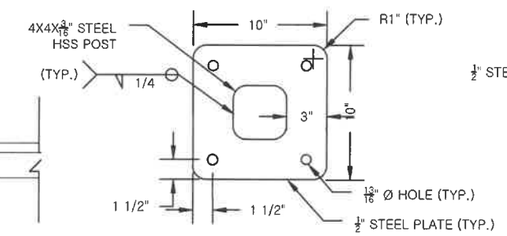

6/12 LIFTING FRAME BASE PLATE DETAILS

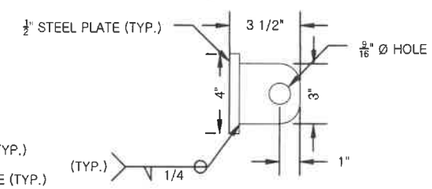

7/12 LIFTING FRAME HINGE DETAILS

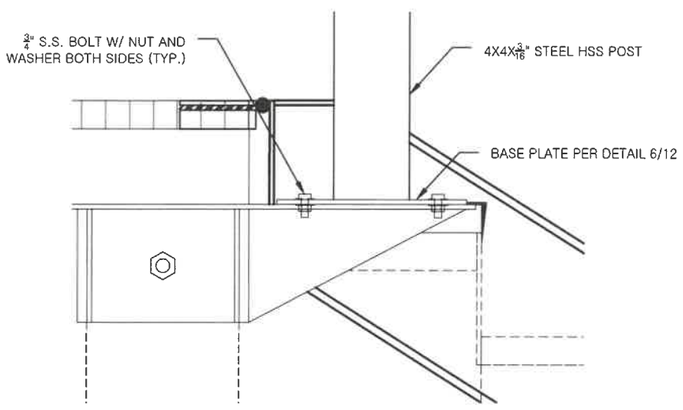

2/12 LIFTING FRAME BASE PLATE DETAILS

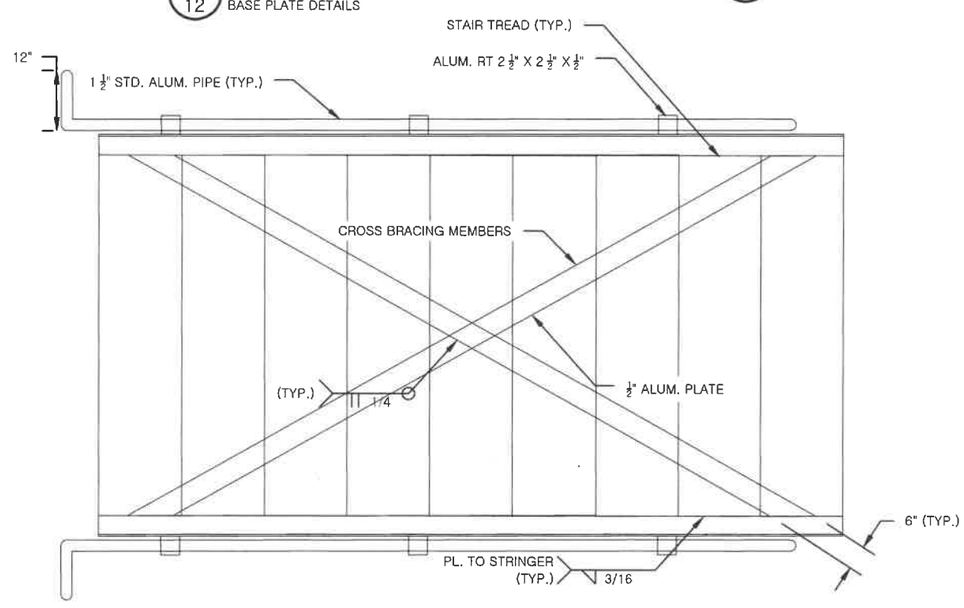

4/12 LIFTING FRAME BASE PLATE DETAILS

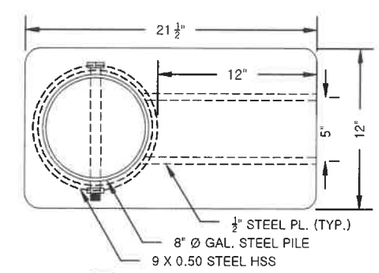

8/12 LIFTING FRAME PILE CAP DIMENSIONS

STATE OF ALASKA
49TH
Rys B. Miranda
CE - 11010
2/28/23
Registered Professional Engineer

STATE OF ALASKA, DEPARTMENT OF NATURAL RESOURCES
PLANS DEVELOPED BY: DIVISION OF PARKS AND OUTDOOR RECREATION
550 W 7TH AVE. SUITE 1340, ANCHORAGE, AK 99501 - 907.269.8731

LIFTING FRAME AND STAIR DETAILS

KRSMA: FUNNY RIVER
RIVERBANK PROTECTION
PROJECT NO. 70139-1

PREPARED: CDC
DRAWN: CDC
REVIEWED: D&C
DATE: FEBRUARY 2023

SHEET 12 OF 13 SHEETS

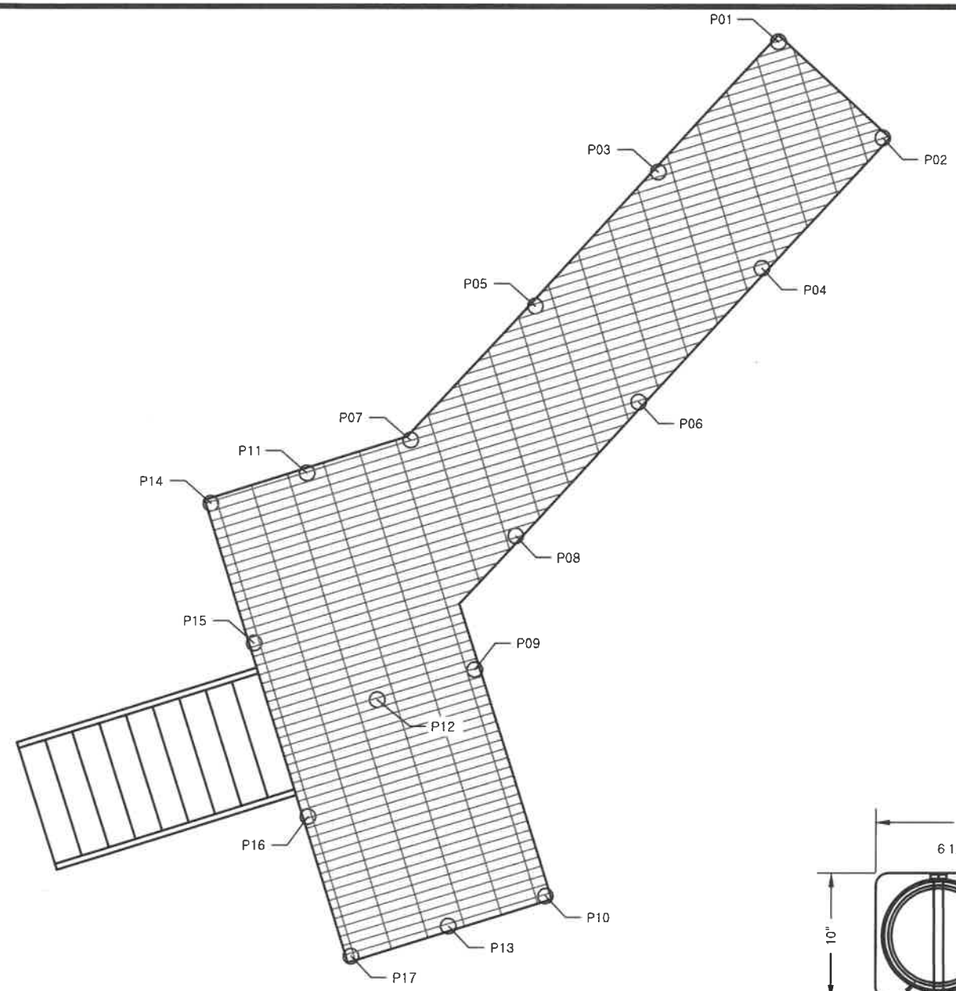

PILE COORDINATE POINT TABLE

POINT	NORTHING	EASTING	TOP OF PILE CAP ELEVATION
P01	2372790.50	1484567.59	151.34
P02	2372787.34	1484571.03	151.34
P03	2372786.21	1484563.64	150.87
P04	2372783.05	1484567.08	150.87
P05	2372781.79	1484559.58	150.39
P06	2372778.63	1484563.02	150.39
P07	2372777.38	1484555.52	149.90
P08	2372774.22	1484558.95	149.90
P09	2372769.80	1484557.63	149.90
P10	2372762.33	1484559.97	149.90
P11	2372776.28	1484552.11	149.90
P12	2372768.81	1484554.45	149.90
P13	2372761.33	1484556.79	149.90
P14	2372775.29	1484548.92	149.90
P15	2372770.67	1484550.37	149.90
P16	2372764.95	1484552.16	149.90
P17	2372760.34	1484553.61	149.90

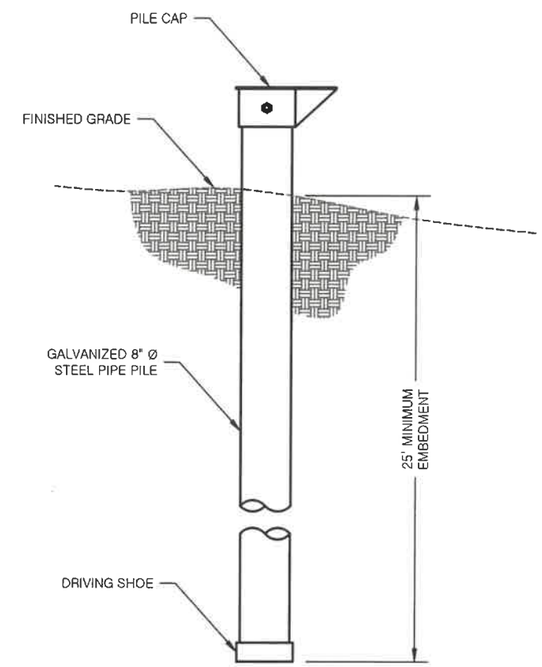

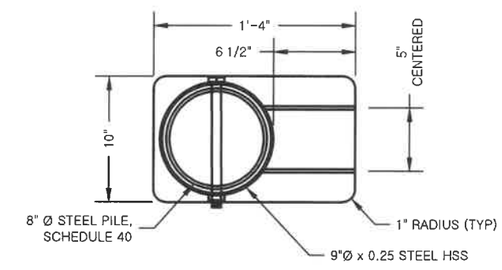

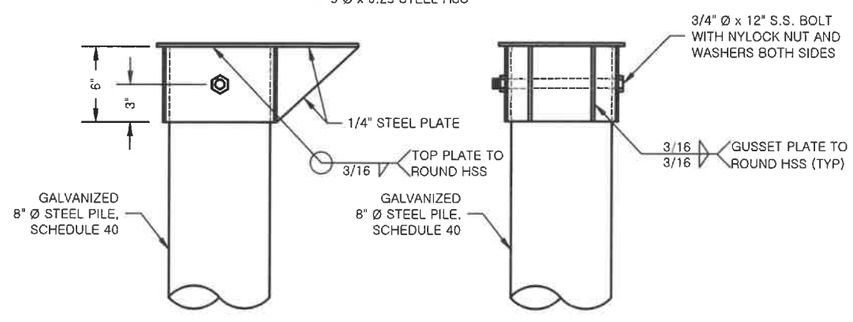

PILE NOTES:

1. PILE DESIGN LOADS (UNFACTORED)
   DEAD LOAD = 25 PSF
   LIVE LOAD = 100 PSF
   SNOW LOAD = 70 PSF
2. PILES SHALL BE DRIVEN WITH AN ENGINEER APPROVED PILE DRIVER.
3. PILES SHALL BE DRIVEN OPEN ENDED UNLESS OTHERWISE APPROVED BY THE ENGINEER.
4. ALL WELDING SHALL CONFORM TO THE REQUIREMENTS OF AWS STRUCTURAL WELDING CODE, AWS D1.1, PUBLISHED BY THE AMERICAN WELDING SOCIETY.
5. WAIT AT LEAST 72 HOURS AFTER PILE INSTALLATION BEFORE APPLYING LOADS ON THE PILE.
6. PILES SHALL BE DRIVEN TO A MINIMUM DEPTH OF 25 FEET AND HAVE AN ULTIMATE BEARING CAPACITY OF 10,000 LBS.
7. ENGINEER SHALL DETERMINE FINAL PILE CAP ORIENTATION IN THE FIELD.
8. INSTALL DRIVING SHOE PER MANUFACTURER'S INSTRUCTIONS.

STATE OF ALASKA
49TH
Rys B. Miranda
CE - 11010
2/28/23
Registered Professional Engineer

STATE OF ALASKA, DEPARTMENT OF NATURAL RESOURCES
PLANS DEVELOPED BY: DIVISION OF PARKS AND OUTDOOR RECREATION
550 W 7TH AVE. SUITE 1340, ANCHORAGE, AK 99501 – 907.269.8731

PILE COORDINATES AND DETAILS

KRSMA: FUNNY RIVER
RIVERBANK PROTECTION
PROJECT NO. 70139-1

PREPARED: RBM
DRAWN: RBM
REVIEWED: D&C
DATE: FEBRUARY 2023

SHEET 13 **OF** 13 **SHEETS**