# STATE OF ALASKA
## DEPARTMENT OF NATURAL RESOURCES
### DIVISION OF PARKS AND OUTDOOR RECREATION

# SETTLERS COVE SRS
# PARKING AND ROAD IMPROVEMENTS

## PROJECT NO. 70959-1

VICINITY MAP

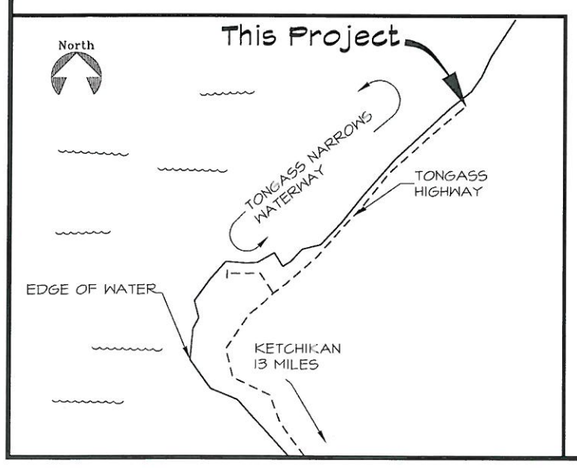


STATE OF ALASKA 49TH
Michael P. Seidl
CE - 10828
3/9/11
Registered Professional Engineer

## INDEX


01. TITLE SHEET
02. EXISTING CONDITIONS PART 1
03. EXISTING CONDITIONS PART 2
04. EXISTING CONDITIONS PART 3
05. SITE PLAN PART 1
06. SITE PLAN PART 2
07. SITE PLAN PART 3
08. CROSS SECTIONS PART 1
09. CROSS SECTIONS PART 2 & ESTIMATE OF QUANTITIES
10. CURVE TABLE
11. PLAN AND PROFILE


The following Division of Parks & Outdoor Rec. standard drawings apply to this project: P-6, R-11
The following D.O.T.(Highways) standard drawings apply to this project: NONE

STATE OF ALASKA
Department of Natural Resources
Division of Parks & Outdoor Recreation

Approved: FOR BEN ELLIS 3/9/2011
Ben Ellis
Director, Alaska State Parks
Date

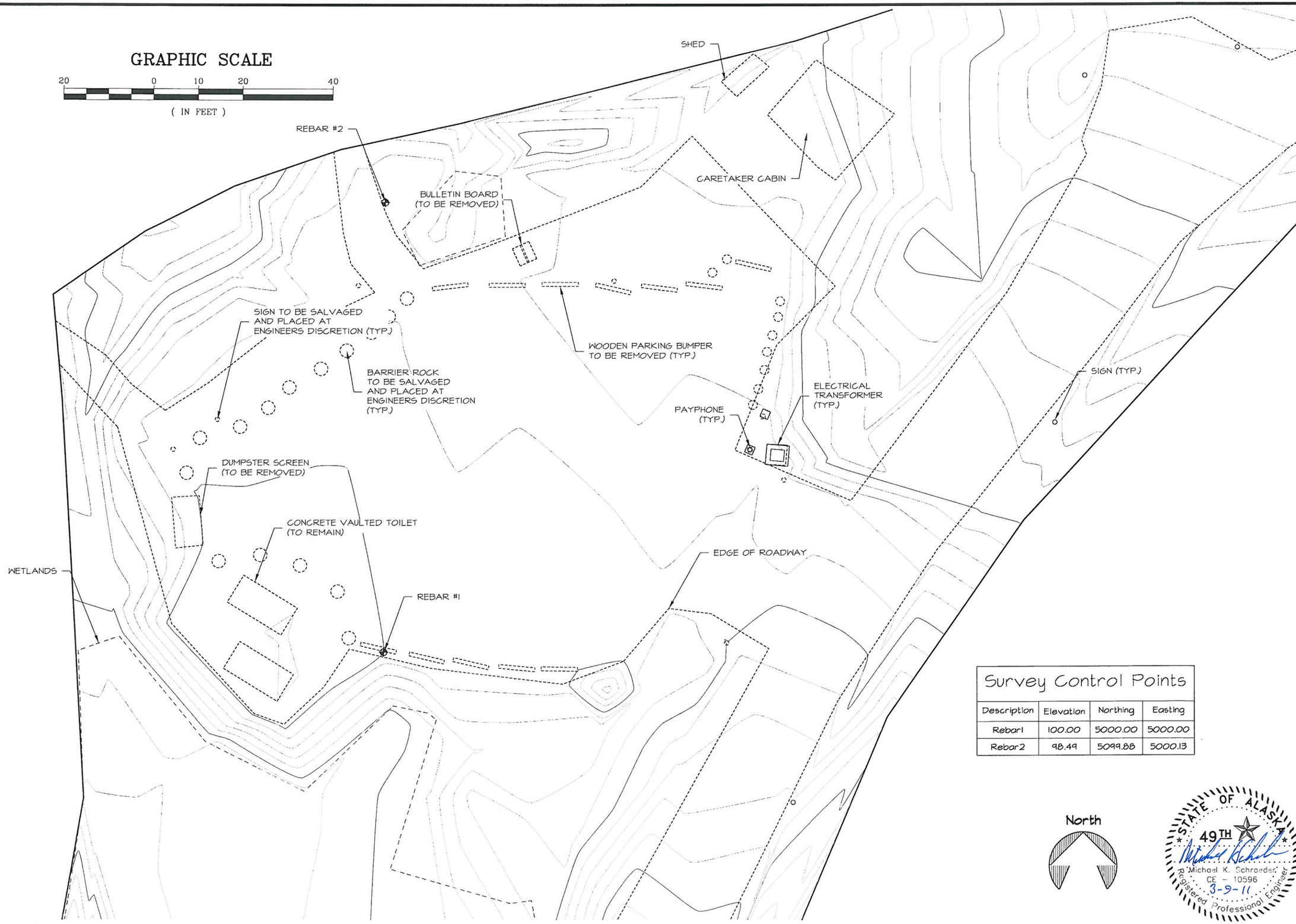


| Survey Control Points | | | |
|---|---|---|---|
| Description | Elevation | Northing | Easting |
| Rebar1 | 100.00 | 5000.00 | 5000.00 |
| Rebar2 | 98.49 | 5099.88 | 5000.13 |

STATE OF ALASKA 49TH Michael K. Schroeder CE - 10596 3-9-11 Registered Professional Engineer

STATE OF ALASKA DEPARTMENT OF NATURAL RESOURCES

EXISTING CONDITIONS PART I

SETTLERS COVE PARKING
AND ROAD IMPROVEMENTS
PROJECT No. 70959-1

ALASKA STATE PARKS

PREPARED: JPV
DRAWN: JPV
REVIEWED: MKS
DATE: 01/28/11

SHEET 2 OF 11 SHEETS

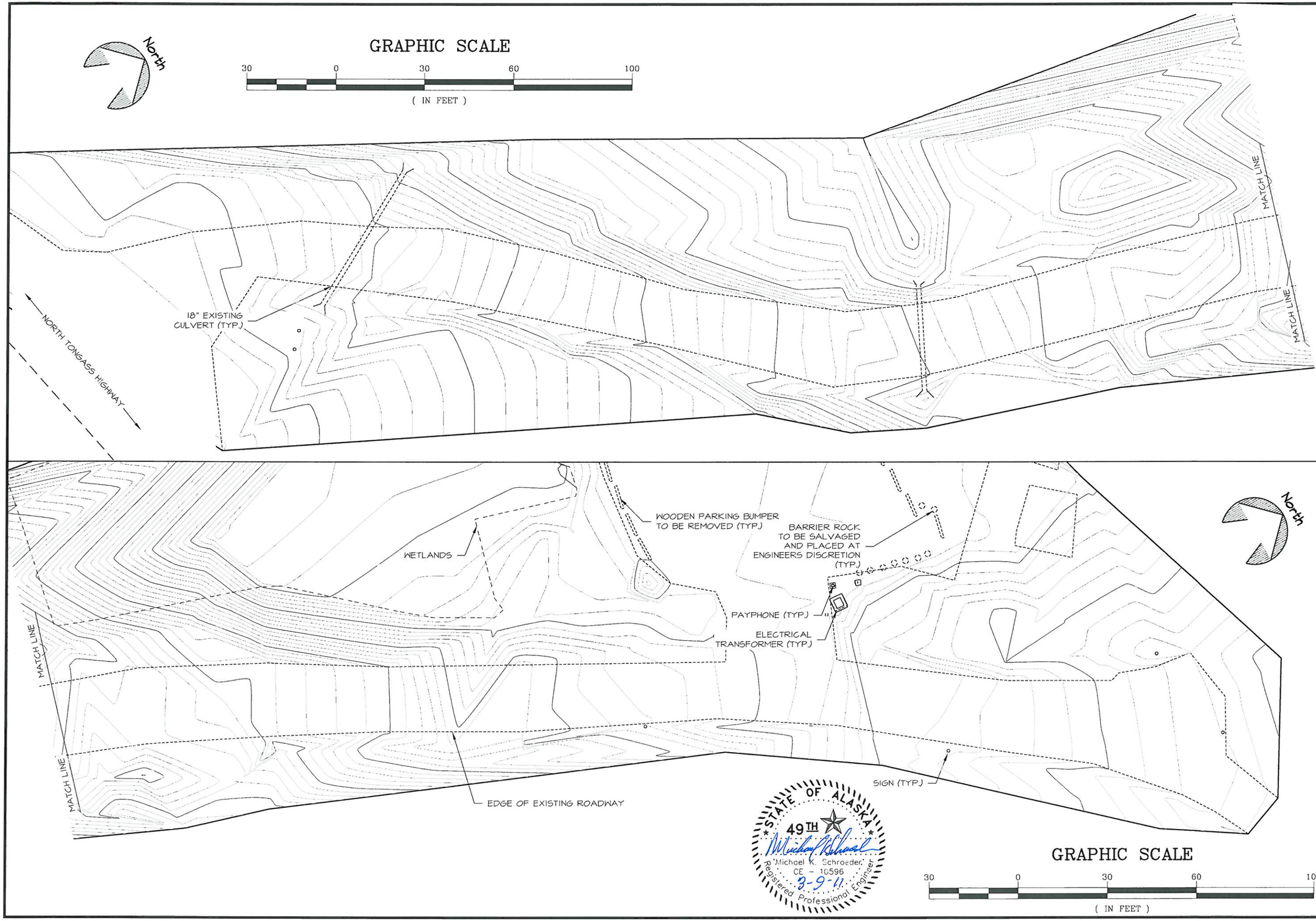


STATE OF ALASKA DEPARTMENT OF NATURAL RESOURCES

EXISTING CONDITIONS PARTT 2

SETTLERS COVE PARKING AND ROAD IMPROVEMENTS
PROJECT No. 70959-1

ALASKA STATE PARKS

PREPARED: JPV
DRAWN: JPV
REVIEWED: MKS
DATE: 01/28/11

SHEET 3 OF 11 SHEETS

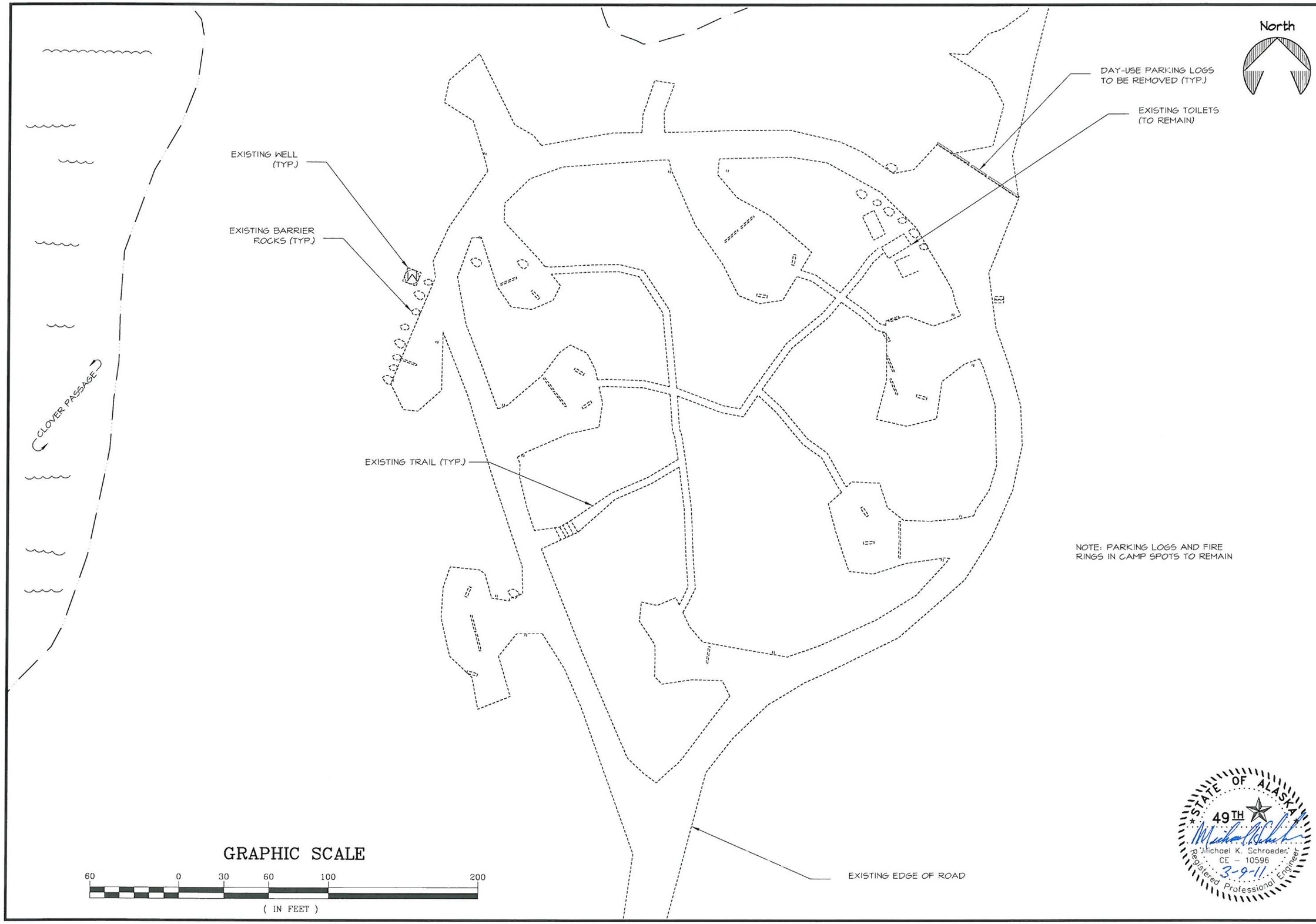


STATE OF ALASKA DEPARTMENT OF NATURAL RESOURCES

# EXISTING CONDITIONS PART 3

## SETTLERS COVE PARKING AND ROAD IMPROVEMENTS
PROJECT No. 70959-1

ALASKA STATE PARKS

STATE OF ALASKA 49TH
Michael K. Schroeder
CE - 10596
3-9-11
Registered Professional Engineer

PREPARED: JPV
DRAWN: JPV
REVIEWED: MKS
DATE: 01/28/11

SHEET 4 OF 11 SHEETS

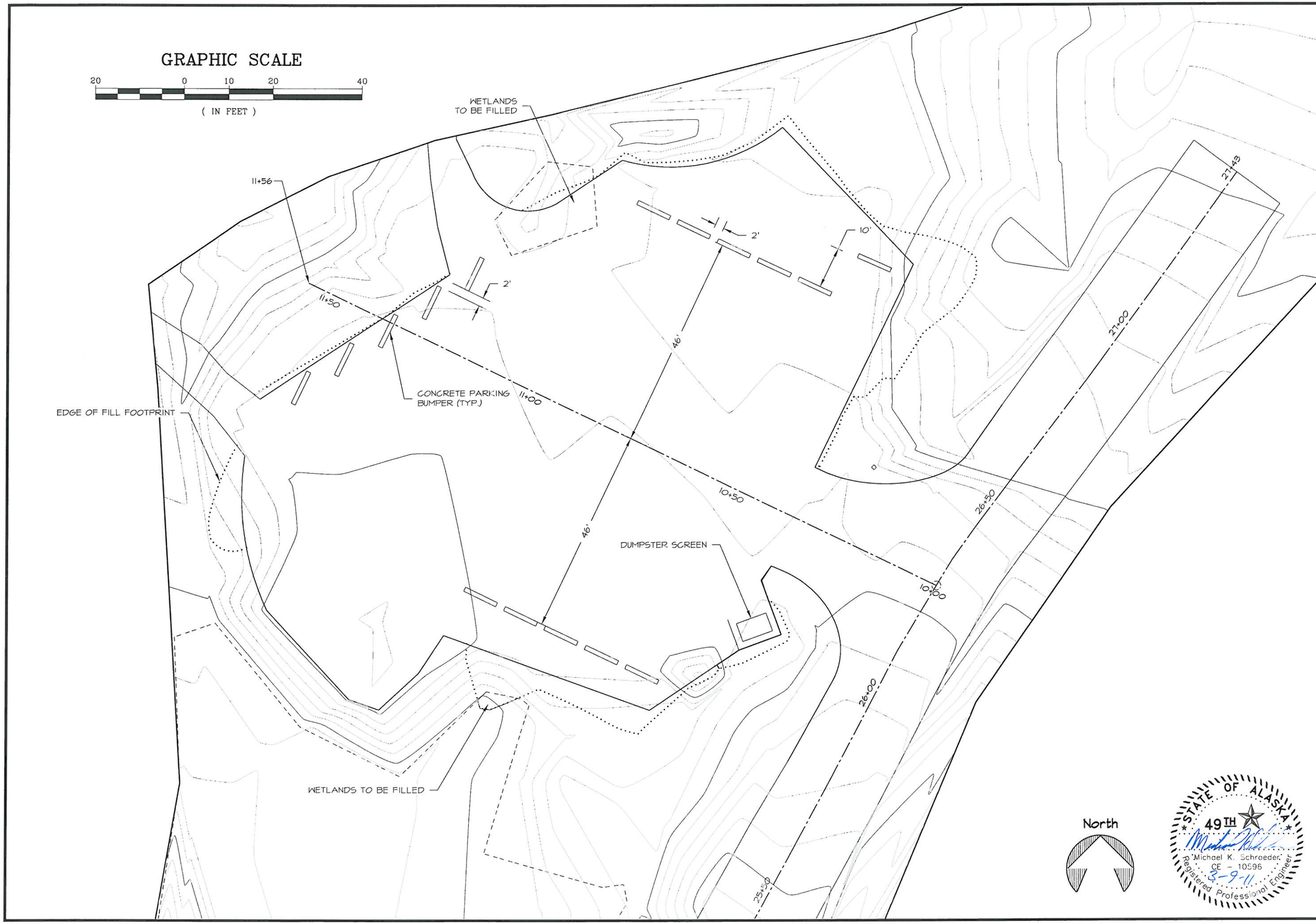


STATE OF ALASKA DEPARTMENT OF NATURAL RESOURCES

SITE PLAN PART I

SETTLERS COVE PARKING AND ROAD IMPROVEMENTS
PROJECT No. 70959-1

ALASKA STATE PARKS

PREPARED: JPV
DRAWN: JPV
REVIEWED: MKS
DATE: 01/28/11

STATE OF ALASKA 49TH
Michael K. Schroeder
CE - 10596
3-9-11
Registered Professional Engineer

SHEET 5 OF 11 SHEETS

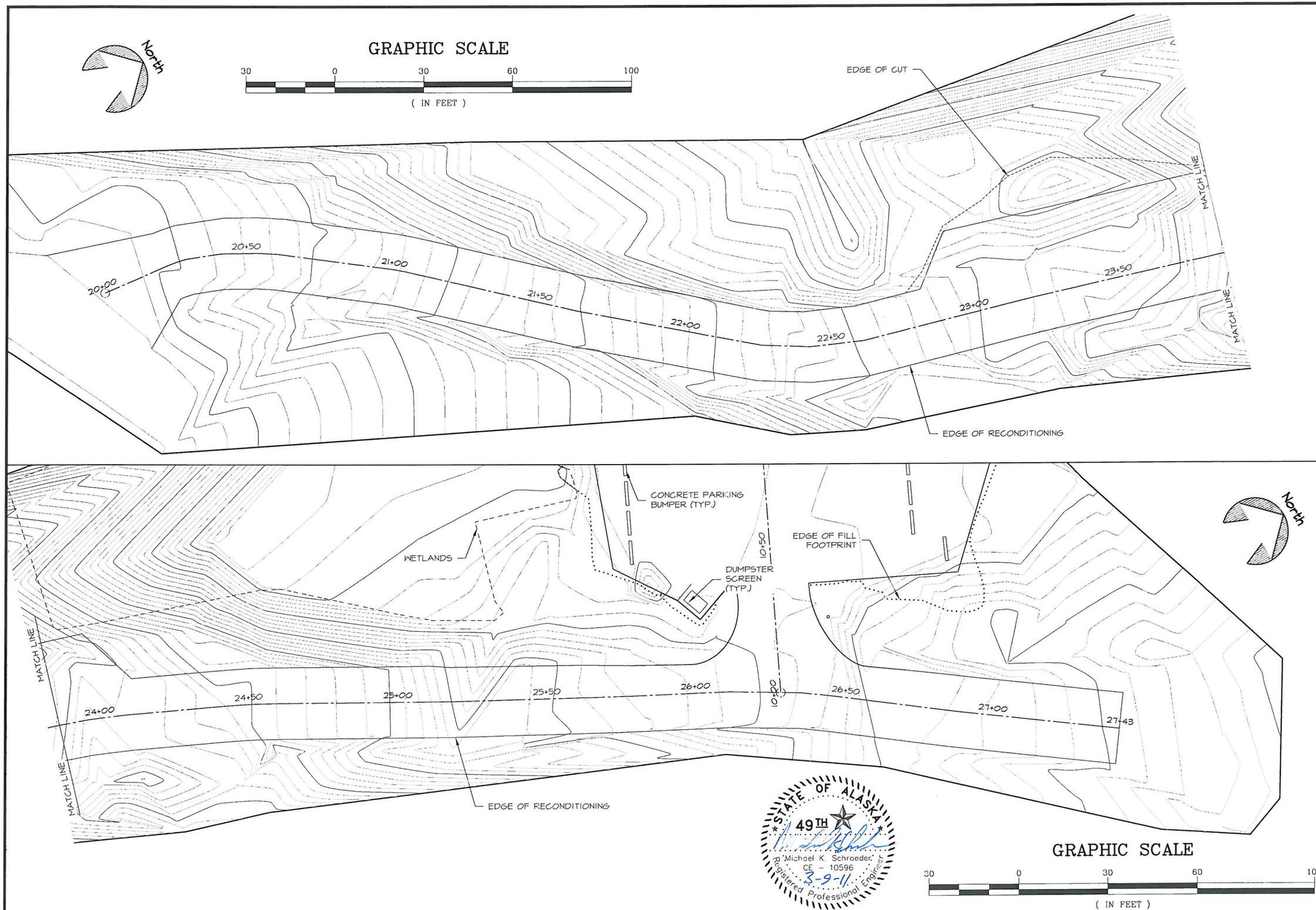


STATE OF ALASKA DEPARTMENT OF NATURAL RESOURCES

SITE PLAN PART 2

SETTLERS COVE PARKING AND ROAD IMPROVEMENTS
PROJECT No. 70959-1

ALASKA STATE PARKS

PREPARED: JPV
DRAWN: JPV
REVIEWED: MKS
DATE: 01/28/11

SHEET 6 OF 11 SHEETS

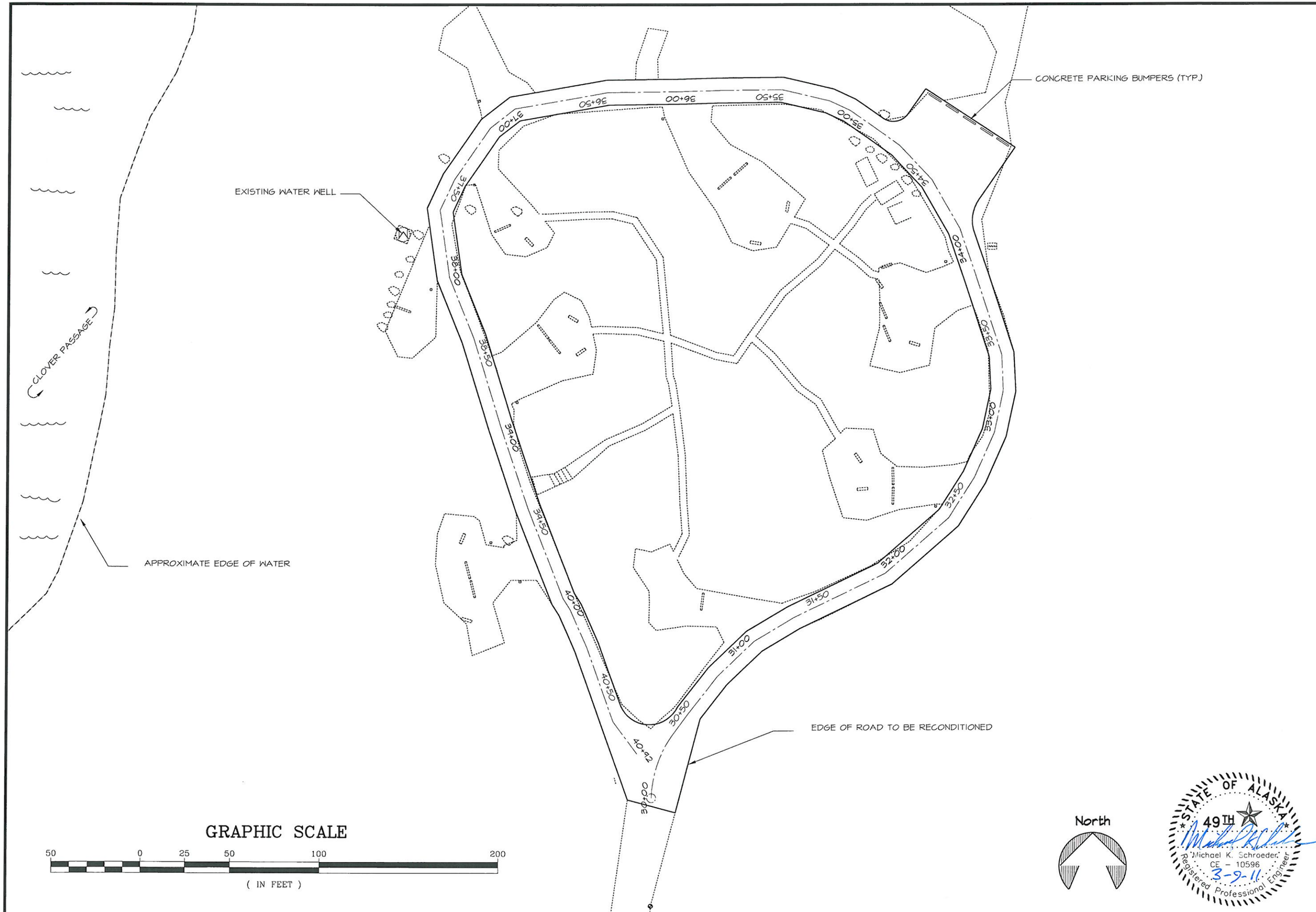


STATE OF ALASKA
49TH
Michael K. Schroeder
CE - 10596
3-9-11
Registered Professional Engineer

STATE OF ALASKA DEPARTMENT OF NATURAL RESOURCES

# SITE PLAN PART 3

SETTLERS COVE PARKING
AND ROAD IMPROVEMENTS
PROJECT No. 70959-1

ALASKA STATE PARKS

PREPARED: JPV
DRAWN: JPV
REVIEWED: MKS
DATE: 01/28/11

SHEET 7 OF 11 SHEETS

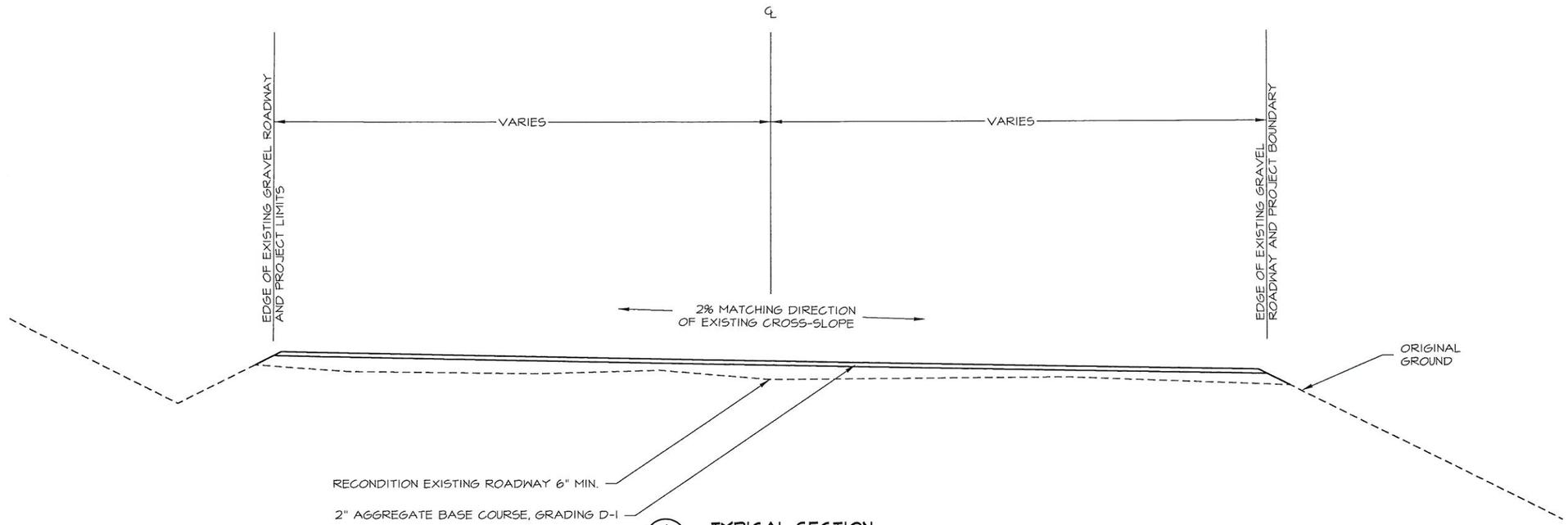


1/8 TYPICAL SECTION
20+00-22+75
24+25-27+43
30+00-40+92

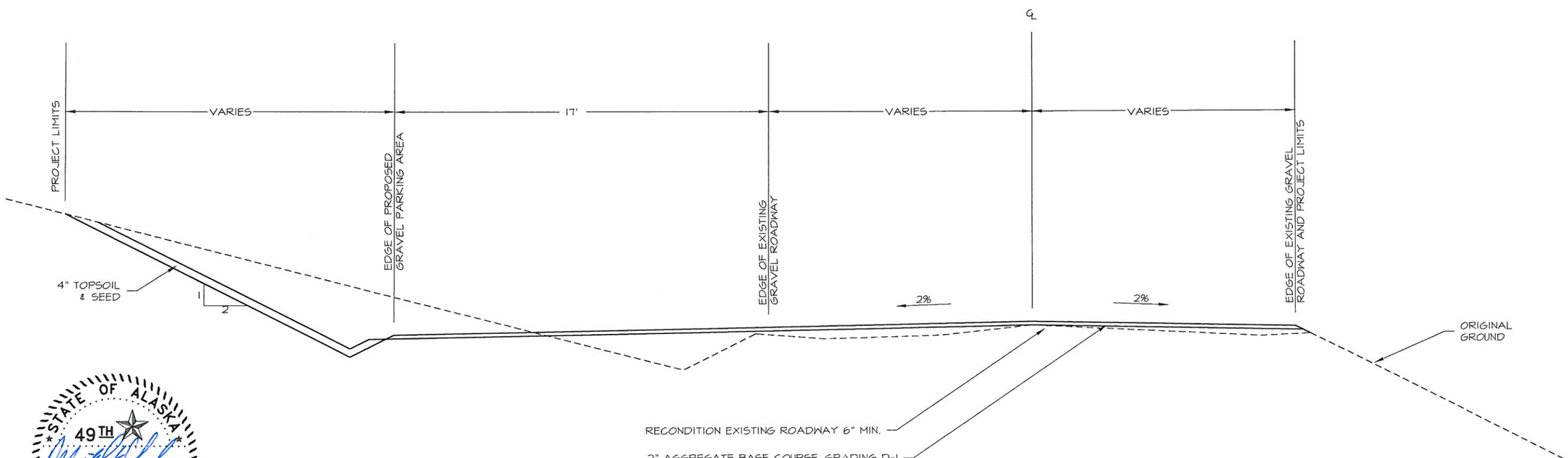


2/8 TYPICAL SECTION
22+75-24+25

STATE OF ALASKA 49TH
Michael K. Schroeder
CE - 10596
3-9-11
Registered Professional Engineer

STATE OF ALASKA DEPARTMENT OF NATURAL RESOURCES

# CROSS SECTIONS PART I

SETTLERS COVE PARKING AND ROAD IMPROVEMENTS
PROJECT No. 70959-1

ALASKA STATE PARKS

PREPARED: JPV
DRAWN: JPV
REVIEWED: MKS
DATE: 01/28/11

SHEET 8 OF 11 SHEETS

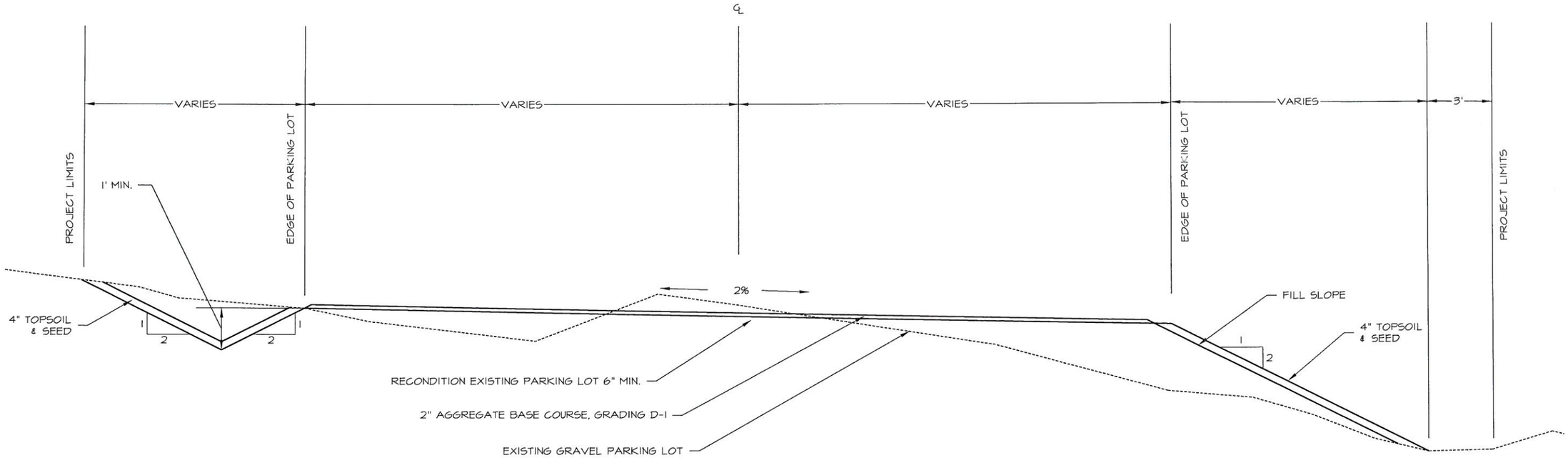


1/9 TYPICAL SECTION
10+00-11+56

| ESTIMATE OF QUANTITIES | | | |
|---|---|---|---|
| ITEM NO. | ITEM | UNIT | QUANTITY |
| | | | |
| 202(1) | REMOVAL OF STRUCTURES AND OBSTRUCTIONS | L.S. | ALL REQ'D |
| 203(3) | UNCLASSIFIED EXCAVATION | L.S. | ALL REQ'D |
| 203(6) | BORROW, TYPE A | TON | 140 |
| 301(1) | AGGREGATE BASE COURSE, GRADING D-1 | TON | 750 |
| 303(3) | RECONDITIONING | STATION | 20 |
| 618(4) | SEEDING | POUND | 6.75 |
| 620(1) | TOPSOIL | S.Y. | 750 |
| 640(1) | MOBILIZATION AND DEMOBILIZATION | L.S. | ALL REQ'D |
| 641(1) | EROSION, SEDIMENT AND POLLUTION CONTROL ADMINISTRATION | L.S. | ALL REQ'D |
| 641(2) | TEMPORARY EROSION, SEDIMENT AND POLLUTION CONTROL | C.S. | ALL REQ'D |
| 641(6) | SWPPP PRICE ADJUSTMENT | C.S. | ALL REQ'D |
| 642(1) | CONSTRUCTION SURVEYING | L.S. | ALL REQ'D |
| 643(2) | TRAFFIC MAINTENANCE | L.S. | ALL REQ'D |
| 643(15) | FLAGGING | C.S. | ALL REQ'D |
| 643(25) | TRAFFIC CONTROL | C.S. | ALL REQ'D |
| 646(1) | CPM SCHEDULING | L.S. | ALL REQ'D |
| 647(2) | WIDE PAD DOZER, 65 HP MINIMUM | HOUR | 10 |
| 650(17) | CONCRETE PARKING BUMPER | EACH | 21 |
| 650(21) | BARRIER ROCK | EACH | 6 |
| 650(28) | DUMPSTER SCREEN | EACH | 1 |

| TABLE OF ESTIMATING FACTORS | | |
|---|---|---|
| ITEM NO. | ITEM DESCRIPTION | ESTIMATING FACTOR |
| | | |
| 203(6) | BORROW, TYPE A | 145 LB./C.F. |
| 301(1) | AGGREGATE BASE COURSE, GRADING D-1 | 148 LB./C.F. |
| | | |

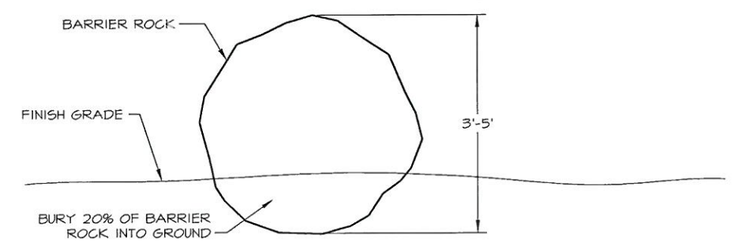


2/9 BARRIER ROCK
SECTION

STATE OF ALASKA 49TH
Michael K. Schroeder
CE - 10596
3-9-11
Registered Professional Engineer

STATE OF ALASKA DEPARTMENT OF NATURAL RESOURCES

CROSS SECTIONS PART 2 & ESTIMATE OF QUANTITIES

SETTLERS COVE PARKING AND ROAD IMPROVEMENTS
PROJECT No. 70959-1

ALASKA STATE PARKS

PREPARED: JPV
DRAWN: JPV
REVIEWED: MKS
DATE: 01/28/11

SHEET 9 OF 11 SHEETS

| Point Table | | |
|---|---|---|
| Point # | Northing | Easting |
| 2 | 5053.59 | 4951.40 |
| 310 | 5006.23 | 4953.05 |
| 311 | 5000.66 | 4992.52 |
| 312 | 4983.92 | 5038.56 |
| 313 | 4997.34 | 5058.67 |
| 314 | 5000.82 | 5068.08 |
| 315 | 5013.00 | 5063.65 |
| 316 | 5016.21 | 5065.89 |
| 317 | 5038.28 | 5075.63 |
| 318 | 5083.71 | 5097.80 |
| 319 | 5114.40 | 5068.49 |
| 320 | 5107.12 | 5032.50 |

| Radius Point Table | | |
|---|---|---|
| Radius Point | Northing | Easting |
| Radius Point #1 | 5031.83 | 5007.31 |
| Radius Point #2 | 5145.60 | 5043.46 |
| Radius Point #3 | 5051.17 | 5092.53 |
| Radius Point #4 | 4996.71 | 5060.59 |

| Survey Control Points | | | |
|---|---|---|---|
| Description | Elevation | Northing | Easting |
| Rebar1 | 100.00 | 5000.00 | 5000.00 |
| Rebar2 | 98.49 | 5099.88 | 5000.13 |

STATE OF ALASKA 49TH Michael K. Schroeder CE - 10596 3-9-11 Registered Professional Engineer

STATE OF ALASKA DEPARTMENT OF NATURAL RESOURCES

# CURVE TABLE

SETTLERS COVE PARKING AND ROAD IMPROVEMENTS
PROJECT No. 70959-1

ALASKA STATE PARKS

PREPARED: JPV
DRAWN: JPV
REVIEWED: MKS
DATE: 01/28/11

SHEET 1 OF 11 SHEETS

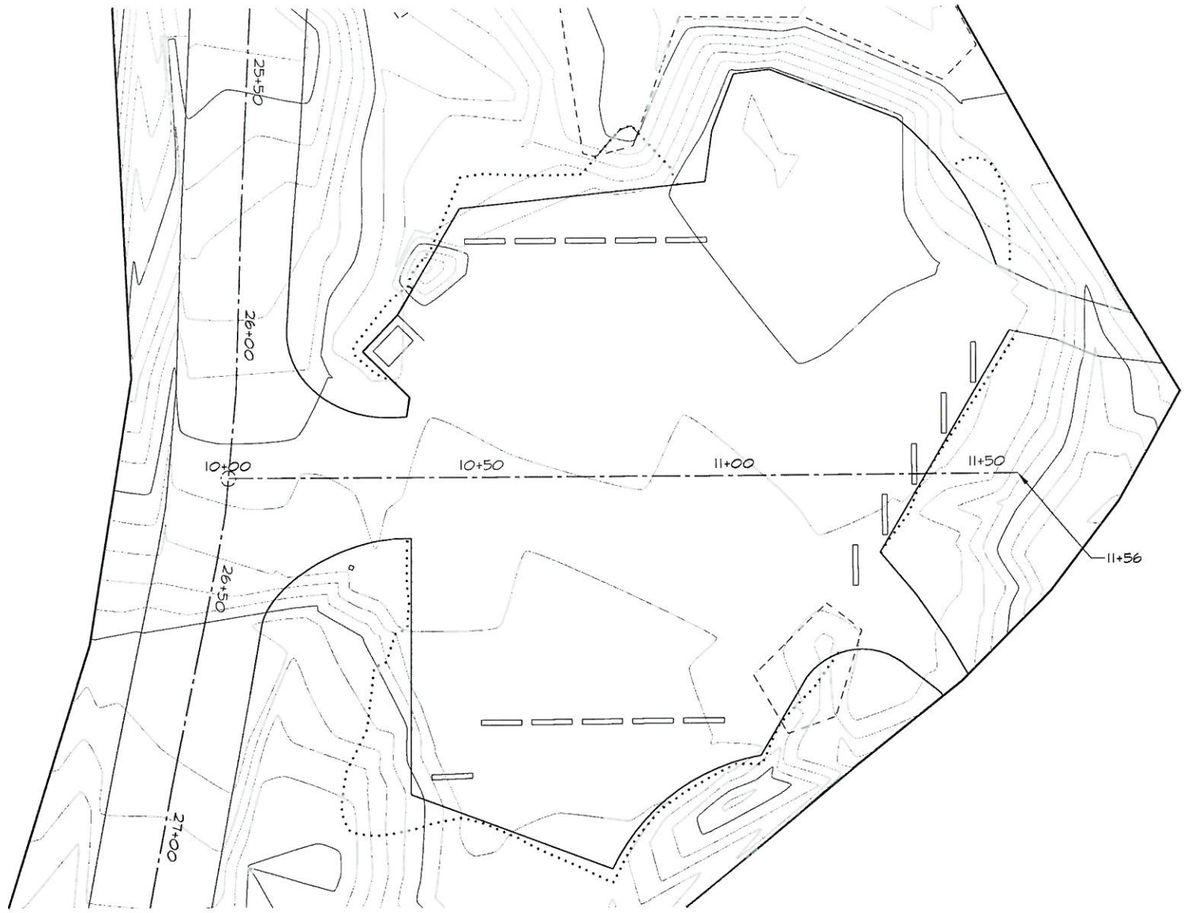

## PARKING LOT PROFILE

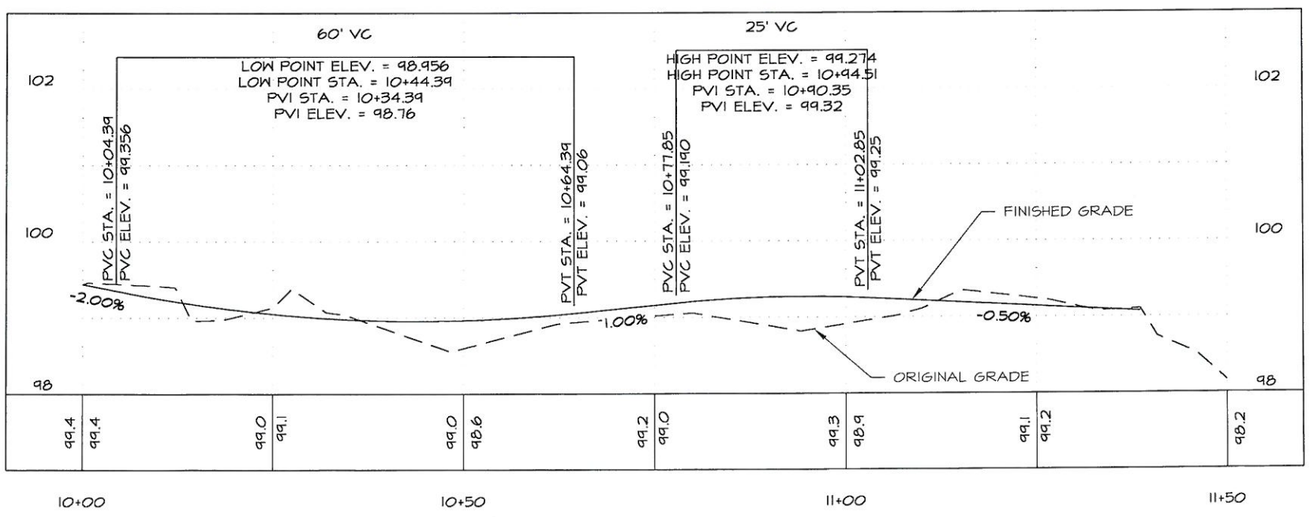


STATE OF ALASKA DEPARTMENT OF NATURAL RESOURCES

**SETTLERS COVE PARKING AND ROAD IMPROVEMENTS**
**PROJECT No. 70959-1**

**PLAN AND PROFILE**

ALASKA STATE PARKS

PREPARED: JPV
DRAWN: JPV
REVIEWED: MKS
DATE: 01/28/11

SHEET ___ OF 11 SHEETS

STATE OF ALASKA 49TH
Michael K. Schroeder
CE - 10596
3-9-11
Registered Professional Engineer

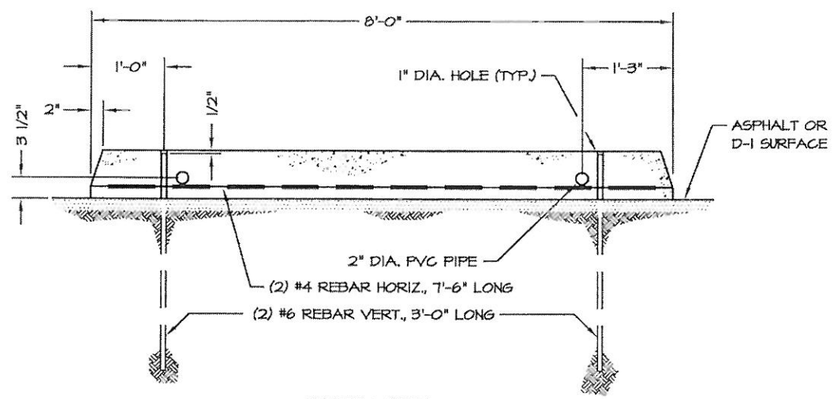


SIDE VIEW

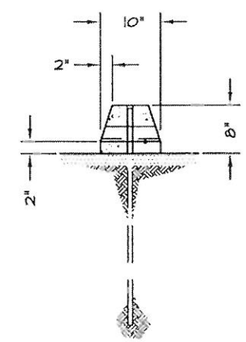


END VIEW

1 CONCRETE PARKING BUMPER

STATE OF ALASKA
49TH
Michael P. Sell
CE - 10828
Registered Professional Engineer

| NO. | REVISION | DATE | APPROVED |
|---|---|---|---|
| 9 | CHANGED TITLE BLOCK | 12/07 | MPS |
| 8 | DELETED WOOD PARKING BUMPER & NOTES | 10/05 | MPS |
| 7 | UPDATED PRESSURE TREATMENT NOTE | 12/04 | MPS |
| 6 | UPDATED PRESSURE TREATMENT NOTE | 3/04 | MPS |
| 5 | REPLACED STAMP | 3/04 | MPS |
| 4 | REPLACED STAMP | 3/02 | DH |
| 3 | ADDED CHAMFER | 5/99 | DH |
| 2 | REM. MATL'S LIST & SCALES, UPDATE NOTES | 10/97 | DH |

STATE OF ALASKA DEPARTMENT OF NATURAL RESOURCES

DESIGN & CONSTRUCTION SECTION

PARKING BUMPER

Alaska StateParks

PREPARED: tlc
DRAWN: tlc
REVIEWED: DH
DATE: 1 MAY 94

SHEET 1 OF 1 SHEETS

P-6

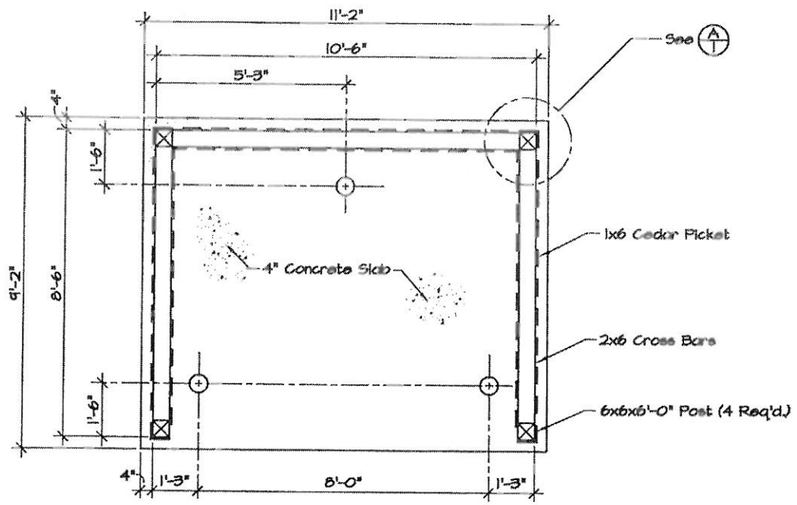


Plan View

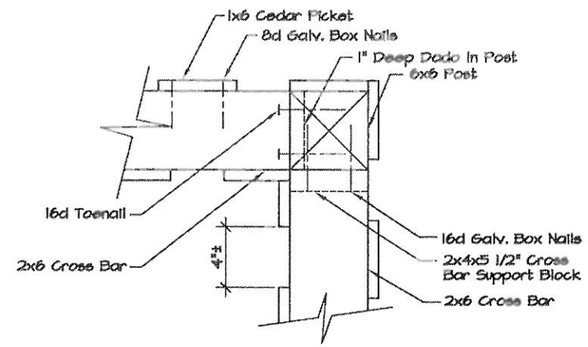


A Corner Detail

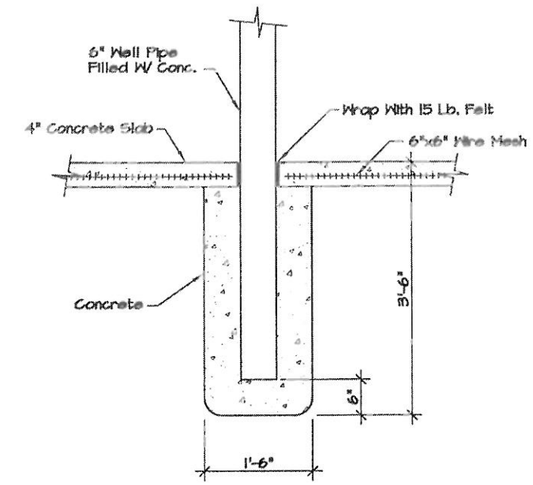


B Footing Detail

## GENERAL NOTES:

1. Stain all wood with 2 coats of russett oil base stain.
2. Fill pipes with concrete & round tops.
3. Concrete to have trowel finish.
   Keep surface of concrete slab moistened for 7 days.
4. Length & width of dumpster screen may be changed to correspond to local dumpster sizes.
5. Holes for well pipe footings are to be hand dug or augered.
6. Rear column bases are turned 90° from front bases for additional lateral support.
7. Exposed column bases & well pipes are to be primed with zinc chromate primer & painted with 2 coats of approved alkyd to match wood stain.
8. Unless otherwise specified, lumber shall be treated.

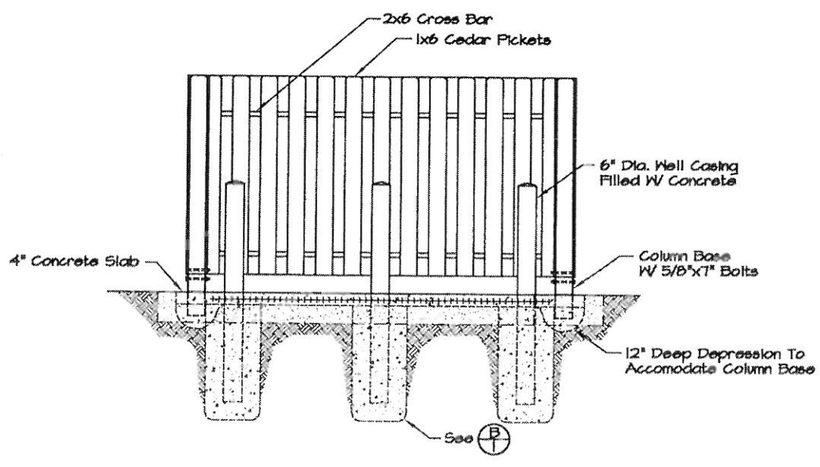


Front Elevation

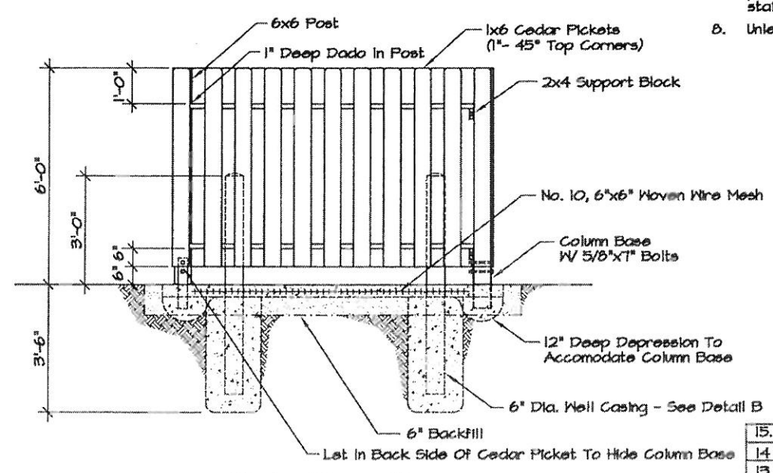


Side Elevation

STATE OF ALASKA 49TH
Michael P. Seidl
CE - 10829
Registered Professional Engineer

| NO. | REVISION | DATE | APPROVED |
|---|---|---|---|
| 15. | CHANGED TITLE BLOCK | 12/07 | MPS |
| 14 | CHANGED LUMBER TREATMENT NOTE | 12/04 | MPS |
| 13. | UPDATED PRESSURE TREATMENT NOTE | 03/04 | MPS |
| 12. | REPLACED STAMP | 03/04 | MPS |
| 11. | REMOVED SCALES | 12/02 | D. Hagg. |
| 10. | REVISED GENERAL NOTE 8. | 12/02 | D. Hagg. |
| 9. | REPLACED STAMP | 3/02 | D. Hagg. |
| 8. | 11"x17" Format/Backfill Specification | 5/95 | D. Hagg. |

STATE OF ALASKA DEPARTMENT OF NATURAL RESOURCES

DESIGN & CONSTRUCTION SECTION

DUMPSTER SCREEN

Alaska State Parks

PREPARED:
DRAWN: P. Nuech.
REVIEWED: DH
DATE: 1-27-83

SHEET 1
R-11
OF 1 SHEETS