Appendix I

Mill Process Flowsheets & Water Balances – 2,500 tpd & 3,500 tpd Processing Rates

Pogo Process Water Balance
2500 tpd Processing Rate

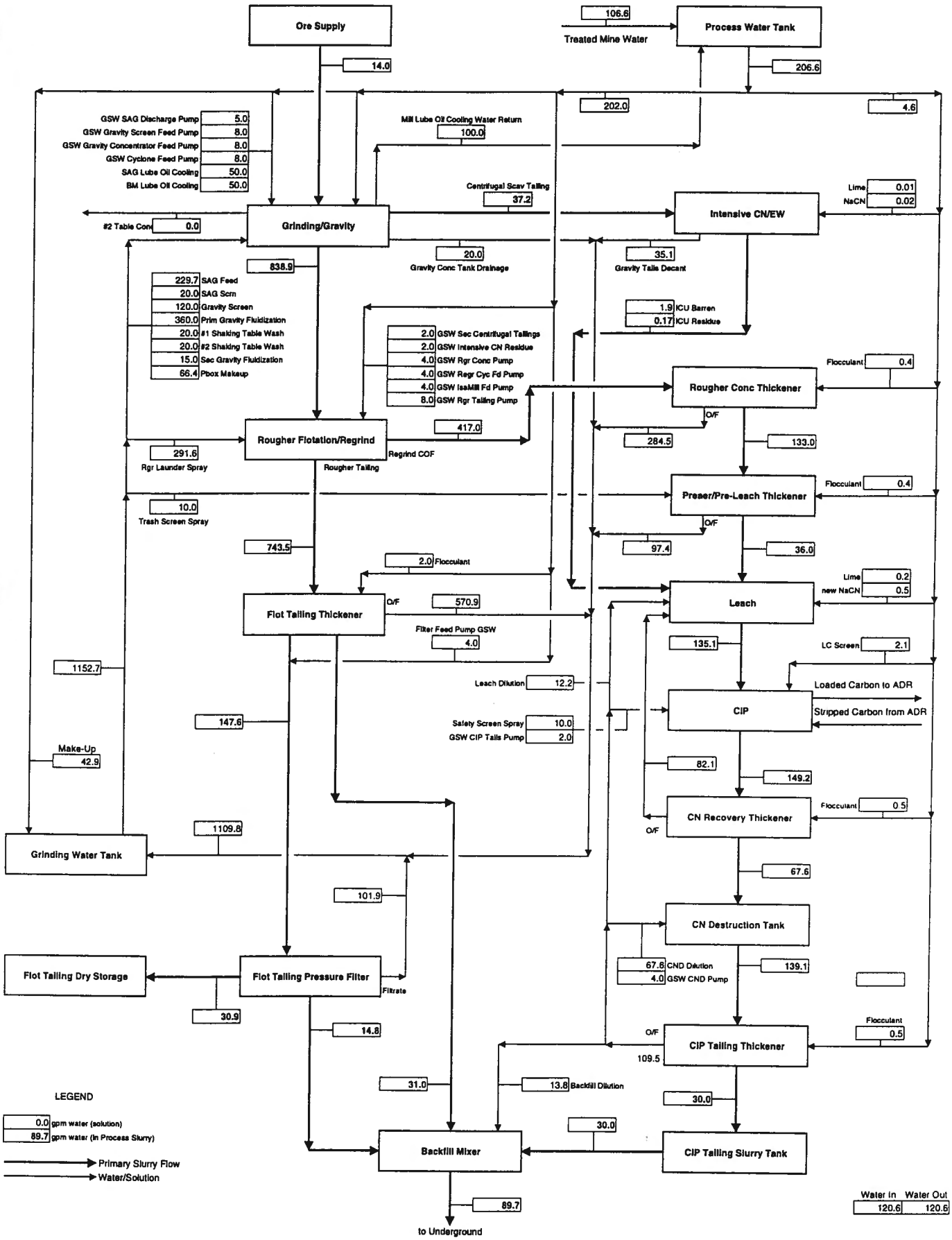

TECK-COMINCO
POGO PROJECT
PROJECT NO. U419F

FLOTATION & LEACH/CIP PROCESS SOLIDS AND WATER BALANCE
WITH GRAVITY GOLD RECOVERY FROM CYCLONE FEED

DATE: January 10, 2002
REV: G

Stream No.	Description	Solids tons/hr	Solution tons/hr	Slurry tons/hr	Solids S.G.	Density % solids	Slurry S.G.	Solids gpm	Solution gpm	Slurry gpm	Set Points
	CRUSHING, ORE STORAGE & RECLAIM										2500 tonnes/day, Mill Feed Rate
											2.71 Ore Specific Gravity
1	Primary Crusher Discharge	277.78	8.59	286.4	2.71	97.00	2.58	409.7	34.3	444.0	3.0 % moisture, ROM Ore
											75 %, Crusher Availability
	GRINDING										12 hours/day
											7 days/week
2	SAG Mill New Feed	113.22	3.50	116.7	2.71	97.00	2.58	167.0	14.0	181.0	
3	Water - SAG Mill Feed		57.47						229.7		92 %, Grinding Availability
4	SAG Mill Discharge	113.22	60.97	174.2	2.71	65.00	1.70	167.0	243.7	410.7	65 % solids, SAG Disch
5	Trommel Screen Spray Water		5.00						20.0		20 gpm, Trommel Screen Spray Water
6	GSW - SAG Discharge Pump		1.25						5.0		5 gpm, GSW - SAG Screen UF Pump
7	SAG Discharge to Gravity Screen Feed PB	113.22	67.22	180.4	2.71	62.75	1.66	167.0	268.7	435.7	90 % solids, SAG Screen O'Size
8	Ball Mill Discharge	310.79	133.20	444.0	2.71	70.00	1.79	458.4	532.4	990.8	
9	GSW - Gravity Screen Feed Pump		2.00						8.0		8 gpm, GSW - Gravity Screen Feed Pump
10	Total Slurry Feed to Gravity Screens	424.02	202.42	626.4	2.71	67.69	1.75	625.4	809.1	1,434.5	0.185 %, Gravity Wt Recovery
11	Water - Gravity Screen Spray		30.02						120.0		40 gpm, Screen Spray Water per unit (of 3)
12	Gravity Screen O'size to Cyclone Feed Pumpbox	84.80	14.97	99.8	2.71	85.00	2.16	125.1	59.8	184.9	20 wt %, +20 mesh solids @ 85% solids
13	GSW - Gravity Distributor Feed Pump		2.00						8.0		8 gpm, GSW - Gravity Distributor Feed Pun
14	Screen Undersize to Knelsons	339.21	219.48	558.7	2.71	60.72	1.62	500.3	877.3	1,377.6	
15	Water - Gravity Fluidization (x 2)		90.07						360.0		180 gpm, Gravity Fluidization Water per unit
16	Primary Gravity Concentrate	0.21	0.05	0.26	4.00	80.00	2.50	0.21	0.21	0.42	4 Primary Gravity Concentrate SG
17	Gravity Tailing to Cyclone Feed Pumpbox	339.00	309.49	648.5	2.71	52.28	1.49	500.1	1,237.0	1,737.2	80 % solids, Primary Gravity Concentrate
18	Water - SAG Mill Lube Cooling		12.51						50.0		50 gpm, SAG Mill Lube Cooling Water
19	Water - Ball Mill Lube Cooling		12.51						50.0		50 gpm, SAG Mill Lube Cooling Water
20	Water - BM Pumpbox Makeup		16.62						66.4		
21	GSW - Cyclone Feed Pump		2.00						8.0		8 gpm, GSW - Cyc Feed Pump
22	Cyclone Feed	423.81	343.08	766.9	2.71	55.26	1.54	625.3	1,371.3	1,996.6	275 %, Circulating Load, CUF
23	Cyclone Underflow	310.79	133.20	444.0	2.71	70.00	1.79	458.5	532.4	990.9	70 % solids, CUF
24	Ball Mill Cyclone Overflow	113.02	209.89	322.9	2.71	35.00	1.28	166.7	838.9	1,005.6	35 % solids, COF
	GRAVITY CONCENTRATE UPGRADING										
25	Primary Gravity Concentrate	0.209	0.05	0.26	4.00	80.00	2.50	0.21	0.21	0.42	
26	Recycled #2 Table Tailings	0.070	5.02	5.09	4.00	1.37	1.01	0.07	20.07	20.14	
27	Water Drainage from Concentrate Tank		5.00						20.00		
28	Feed to #1 Shaking Table	0.279	0.07	0.35	4.00	80.00	2.50	0.28	0.28	0.56	5 Concentration Ratio, Shaking Table #1
29	#1 Shaking Table Wash Water		5.00						20.00		20 gpm, Shaking Table Wash Water
30	#1 Shaking Table Concentrate	0.056	0.01	0.07	7.00	80.00	3.18	0.03	0.06	0.09	7 SG Table 1 Concentrate
31	#1 Shaking Table Tailings (Feed to Centrifugal)	0.224	5.06	5.28	3.25	4.23	1.03	0.27	20.22	20.50	80 % solids, Concentrate
32	Centrifugal Scavenger Fluidization Water		3.75						15.00		15 gpm, Fluidization Water
33	Centrifugal Scavenger Concentrate	0.049	0.01	0.06	5.00	80.00	2.78	0.04	0.05	0.09	
34	#2 Shaking Table Feed	0.105	0.03	0.13	6.00	80.00	3.00	0.07	0.10	0.17	5 SG Scav Concentrate
35	#2 Shaking Table Wash Water		5.00						20.00		3 Concentration Ratio, Shaking Table #2
36	#2 Shaking Table Concentrate	0.035	0.01	0.04	10.00	80.00	3.57	0.01	0.03	0.05	20 gpm, Shaking Table Wash Water
37	#2 Shaking Table Tailings	0.070	5.02	5.09	4.00	1.37	1.01	0.07	20.07	20.14	0.035 tons/day Gravity Conc
38	GSW - Centrifugal Scav Tailings Pump		0.50						2.00		2 gpm, GSW Centrifugal Scav Tails Pump
39	Centrifugal Scavenger Tailings to Decant Tank	0.174	9.30	9.48	2.76	1.84	1.01	0.25	37.17	37.43	10 SG Table 2 Concentrate
40	Decant Tank Overflow to Grinding Water Tank		8.78						35.11		4 SG Table 2 Tailings
41	Feed to Intensive Cyanidation Unit (ICU)	0.174	0.52	0.70	2.76	25.0	1.19	0.25	2.09	2.34	25 % solids, Intensive CN Feed
42	Lime		0.001						0.0		2.0 lb/ton solids Lime @ 12% slurry
43	New Cyanide Solution		0.006						0.0		5.4 lb/ton solution NaCN @ 25% conc
44	ICU Drum Discharge	0.174	0.52	0.70	2.76	25.0	1.19	0.25	2.09	2.34	
45	ICU Leach Residue	0.174	0.0436	0.22	2.76	80.0	2.04	0.25	0.17	0.43	80 % solids, leach residue
46	ICU Leach Solution to Electrowinning		0.48						1.92		
47	GSW - ICU Leach Residue Pump		0.50						2.00		2 gpm, GSW Intensive CN Leach Residue I
48	ICU Leach Residue to Small Regrind	0.174	0.54	0.72	2.76	24.28	1.18	0.25	2.17	2.43	

TECK COMINCO
POGO PROJECT
PROJECT NO. U419F

FLOTATION & LEACH/CIP PROCESS SOLIDS AND WATER BALANCE
WITH GRAVITY GOLD RECOVERY FROM CYCLONE FEED

DATE: January 10, 2002
REV: G

Stream No.	Description	Solids tons/hr	Solution tons/hr	Slurry tons/hr	Solids S.G.	Density % solids	Slurry S.G.	Solids gpm	Solution gpm	Slurry gpm	Set Points
	ROUGHER FLOTATION										
49	Rougher Flotation Feed	113.02	209.89	322.9	2.71	35.00	1.28	166.7	838.9	1,005.6	9.815 Wt, Rougher Conc
50	Rougher Concentrate Stage 1	4.31	10.06	14.4	3.00	30.00	1.25	5.7	40.2	46.0	3.0 SG solids, Rougher Conc
51	Water - Stage 1 Launder		14.65						58.5		30 % solids, Rougher Conc over Lip
52	Rougher Concentrate Stage 2	2.83	6.59	9.4	3.00	30.00	1.25	3.8	26.4	30.1	gpm, Rougher Launder Water, each
53	Water - Stage 2 Launder		18.12						72.4		3.815 Wt%, Stage 1
54	Rougher Concentrate Stage 3	2.26	5.27	7.5	3.00	30.00	1.25	3.0	21.1	24.1	2.5 Wt%, Stage 2
55	Water - Stage 3 Launder		19.43						77.7		2 Wt%, Stage 3
56	Rougher Concentrate Stage 4	1.70	3.96	5.7	3.00	30.00	1.25	2.3	15.8	18.1	1.5 Wt%, Stage 4
57	Water - Stage 4 Launder		20.75						82.9		10 % solids, Rougher Conc to Regrinding
58	Total Rougher Launder Water		72.95						291.6		
59	GSW - Rougher Conc Pump		1.00						4.0		4 gpm, GSW Rougher Conc Pump
60	Rougher Concentrate to Regrind	11.09	99.83	110.9	3.00	10.00	1.07	14.8	399.0	413.8	
61	Rougher Tailings	101.92	184.00	285.9	2.68	35.65	1.29	152.1	735.5	887.6	
	ROUGHER CONCENTRATE REGRINDING										
62	Rougher Concentrate to Regrind Feed	11.09	99.83	110.9	3.00	10.00	1.07	14.8	399.0	413.8	
63	Water - Trash Screen Spray		2.50						10.0		10 gpm, Trash Screen Spray
64	Total Feed to Regrind	11.09	102.3	113.4	3.00	9.78	1.07	14.8	409.0	423.8	
65	GSW - Regrind Cyc Feed Pump		1.00						4.0		4 gpm, GSW Regr Cyc Feed Pump
66	Regrind Cyclone Feed	44.4	154.3	198.6	3.00	22.34	1.17	59.1	616.5	675.7	40 % solids, Regrind CUF
67	Regrind Cyclone Underflow	33.3	49.92	83.2	3.00	40.0	1.36	44.3	199.5	243.9	300 %, Circulating Load, CUF
68	GSW - IsaMill Feed Pump		1.00						4.0		4 gpm, GSW IsaMill Feed Pump
69	IsaMill Feed	16.6	25.96	42.6	3.00	39.06	1.35	22.2	103.8	125.9	
70	Regrind Cyclone Overflow to Thickener	11.09	104.34	115.4	3.00	9.61	1.07	14.8	417.0	431.8	
	ROUGHER TAILING DEWATERING										
71	GSW - Rougher Tailing Pump		2.00						8.0		8 gpm, GSW Rougher Tailing Pump
72	Rougher Tailing to Deep Cone Thickener	101.92	186.00	287.9	2.68	35.40	1.28	152.1	743.5	895.6	0.05 lb/ton, Flocc Tailing Thickener
73	Flocculant to Thickener		0.51						2.0		0.50 %, Flocculant Concentration
74	Flot Tailings Thickener U'Flow Recycle	305.77	131.04	436.8	2.68	70.00	1.78	456.4	523.8	980.2	300% Deep Cone Thickener U'Flow Recycle Ra
75	Flot Tailings Thickener U'Flow Pumping Rate	407.69	174.72	582.4	2.68	70.00	1.78	608.6	698.4	1,307.0	70 %solids, Thickener Underflow
76	Flot. Tailing Thick O'flow to Grinding Water Tank		142.83						570.9		
77	Flot. Tailing Thickener Underflow to Paste Mixer	18.12	7.77	25.9	2.68	70.00	1.78	27.0	31.0	58.1	60 % solids, Slurry Storage Tank
78	GSW - Filter Feed Pump		1.00						4.0		4 gpm, GSW Filter Feed Pump
79	Flot. Tailing Slurry to Pressure Filter	83.80	36.92	120.7	2.68	69.42	1.77	125.1	147.6	272.7	
80	Avg. Pressure Filter Cake to Dry Tailing	56.62	7.72	64.3	2.68	88.00	2.23	84.5	30.9	115.4	12 % moist, Flot. Tailing Filter Cake
81	Avg. Pressure Filter Cake to Paste	27.18	3.71	30.9	2.68	88.00	2.23	40.6	14.8	55.4	55.555556 % Filter Cake to Dry Tailing
82	Flot. Tailing Pressure Filter Filtrate		25.49						101.9		
	CONCENTRATE THICKENING										
83	Rougher Concentrate to Concentrate Thickener	11.09	104.34	115.4	3.00	9.61	1.07	14.8	417.0	431.8	0.10 lb/ton, Flocc Conc Thickener
84	Floccculant		0.11						0.4		0.50 %, Flocculant Concentration
85	Concentrate Thickener Underflow	11.09	33.28	44.4	3.00	25.00	1.20	14.8	133.0	147.8	25 % solids, Thickener Underflow
86	Thickener Overflow to Grinding Water Tank		71.17						284.5		
	ROUGHER CONCENTRATE PRE-AERATION, PRELEACH THICKENING & CN LEACH										
87	Feed to Rougher Concentrate Pre-aeration	11.09	33.28	44.4	3.00	25.00	1.20	14.8	133.0	147.8	
88	Feed to PreLeach Thickener	11.09	33.28	44.4	3.00	25.00	1.20	14.8	133.0	147.8	0.10 lb/ton, Flocc Conc Thickener
89	Floccculant		0.11						0.4		0.50 %, Flocculant Concentration
90	PreLeach Thickener Underflow	11.09	9.01	20.1	3.00	55.17	1.58	14.8	36.0	50.8	
91	Thickener Overflow to Grinding Water Tank		24.37						97.4		

TECK-COMINCO
POGO PROJECT
PROJECT NO. U419F

DATE: January 10, 2002
REV: G

FLOTATION & LEACH/CIP PROCESS SOLIDS AND WATER BALANCE
WITH GRAVITY GOLD RECOVERY FROM CYCLONE FEED

Stream No.	Description	Solids tons/hr	Solution tons/hr	Slurry tons/hr	Solids S.G.	Density % solids	Slurry S.G.	Solids gpm	Solution gpm	Slurry gpm	Set Points
92	Thickener Underflow to CN Leach	11.09	9.01	20.1	3.00	55.17	1.58	14.8	36.0	50.8	1.0 lb/ton, Lime
93	Reground ICU Leach Residue to Flotation Leach	0.17	0.54	0.7	2.76	24.28	1.18	0.3	2.2	2.4	
94	Lime		0.05						0.2		12 %, Lime Concentration
95	New Cyanide Solution		0.14						0.5		2.0 lb/t solution, NaCN
96	Intensive CN Barren Solution		0.48						1.9		
97	Recycled CN Recovery Thick OF to Leach Feed		20.54						82.1		
98	CIP Tailings Thickener Overflow to Leach Feed		3.04						12.2		25 %, NaCN Concentration
99	Leach Tank Feed	11.27	33.80	45.1	3.00	25.00	1.20	15.0	135.1	150.1	92.4 % New NaCN Required
100	Leach Tank Discharge	11.27	33.80	45.1	3.00	25.00	1.20	15.0	135.1	150.1	100 % New NaCN Added
											25 % solids, Leach Feed
	CIP, CN RECOVERY & CYANIDE DESTRUCTION										
101	Feed to CIP	11.27	33.80	45.1	3.00	25.00	1.20	15.0	135.1	150.1	
102	Slurry to Loaded Carbon Screen	15.01	45.03	60.0	3.00	25.00	1.20	20.00	180.0	200.0	200 gpm, Loaded Carbon Pump
103	Water - LC Screen Spray (Instantaneous)		2.50						10.0		10 gpm, Loaded Carbon Screen Spray
104	CIP Flow During Carbon Advance	26.28	81.34	107.6	3.00	24.42	1.19	35.0	325.1	360.1	5 hrs/day, Loaded Carbon Transfer
105	Water - LC Screen Spray (24-hr avg)		0.52						2.1		10 gpm, Safety Screen Spray
106	#6 CIP Tank Discharge	11.27	34.32	45.6	3.00	24.71	1.20	15.0	137.2	152.2	
107	CIP Thickener OF to Safety Screen Spray		2.50						10.0		
108	GSW - CIP Tails Pump		0.50						2.0		2 gpm, GSW CIP Tails Pump
109	Feed to CN Recovery Thickener	11.27	37.32	48.6	3.00	23.19	1.18	15.0	149.2	164.2	0.10 lb/ton, Flocc CIP Tailing Thickener
110	Flocculant		0.11						0.5		0.50 %, Flocculant Concentration
111	CN Recovery Thickener Overflow		20.54						82.1		
112	CN Recovery Thickener Underflow	11.27	16.90	28.2	3.00	40.00	1.36	15.0	67.6	82.6	40 % solids, CN Recov Thick UF
113	CIP Tailing Thickener OF to CN Destruction		16.90						67.6		
114	Feed to Cyanide Destruction Tank	11.27	33.80	45.1	3.00	25.00	1.20	15.0	135.1	150.1	25 % solids, CN Destruction
115	GSW - CN Destruct Pump		1.00						4.0		4 gpm, GSW CN Destruct Pump
116	Discharge from Cyanide Destruction	11.27	34.80	46.1	3.00	24.46	1.19	15.0	139.1	154.1	
	CIP TAILING DEWATERING										0.10 lb/ton, Flocc CIP Tailing Thickener
117	Flow from Cyanide Destruction	11.27	34.80	46.1	3.00	24.46	1.19	15.0	139.1	154.1	0.50 %, Flocculant Concentration
118	Flocculant		0.11						0.5		60 % solids, CIL Tailing Deep Cone Thick U/
119	Feed to CIP Tailing Deep Cone Thickener	11.27	34.91	46.2	3.00	24.40	1.19	15.0	139.6	154.6	
120	CIP Tailing Thickener Overflow		27.40						109.5		
121	CIP Tailing Thickener OF to CN Destruction		16.90						67.6		
122	CIP Tailing Thickener OF to Paste Backfill		3.45						13.8		
123	CIP Tailing Thickener OF to Leach Feed		3.04						12.2		
124	CIP Tailing Thickener OF to CIP Tails Pump GSW		0.50						2.0		
125	CIP Tailing Thickener OF to CND Pump GSW		1.00						4.0		
126	CIP Tailing Thickener OF to Safety Screen Spray		2.50						10.0		
127	Thickener Underflow Pumping Rate	45.1	30.05	75.1	3.00	60.0	1.67	60.0	120.1	180.1	300 % Recycle, Thickener Underflow
128	Thickener Underflow to Storage Tank	11.27	7.51	18.8	3.00	60.00	1.67	15.0	30.0	45.0	(ODS Pump on Thickener U/F)
129	Instantaneous Feed to CIP Tailing Paste Mixer	22.53	15.02	37.6	3.00	60.00	1.67	30.0	60.0	90.1	
	BACKFILL PRODUCTION										
130	Filtered Flot Tailing to Backfill Mixer (24 hr avg)	27.18	3.71	30.9	2.68	88.00	2.23	40.6	14.8	55.4	Note: These are 24-hr Average Flowrates
131	Flot Tailing Thickener U'flow to Mixer (24 hr avg)	18.12	7.77	25.89	2.68	70.00	1.78	27.0	31.0	58.1	with 92% availability factor
132	CIP Tailing Slurry to Backfill Mixer (24 hr avg)	11.27	7.51	18.8	3.00	60.00	1.67	15.0	30.0	45.0	2 % Cement to Backfill
133	Cement to Paste Mixer (24 hr avg)	1.13	0.00	1.1	3.15	100.00	3.15	1.4	-	1.4	3.15 Cement SG
134	Water - Backfill Dilution (24 hr avg)		3.45						13.8		
135	Backfill to Mine 24-hr Average	57.70	22.44	80.1	2.75	72.00	1.85	83.9	89.7	173.6	72 % solids, Paste Density
136	Backfill to Mine @ Design Operating Time	106.16	41.29	147.4	2.75	72.00	1.85	154.3	165.0	319.3	50 % Backfill Operating Time
											(92% availability factor removed)

Pogo Process Water Balance
3500 tpd Processing Rate

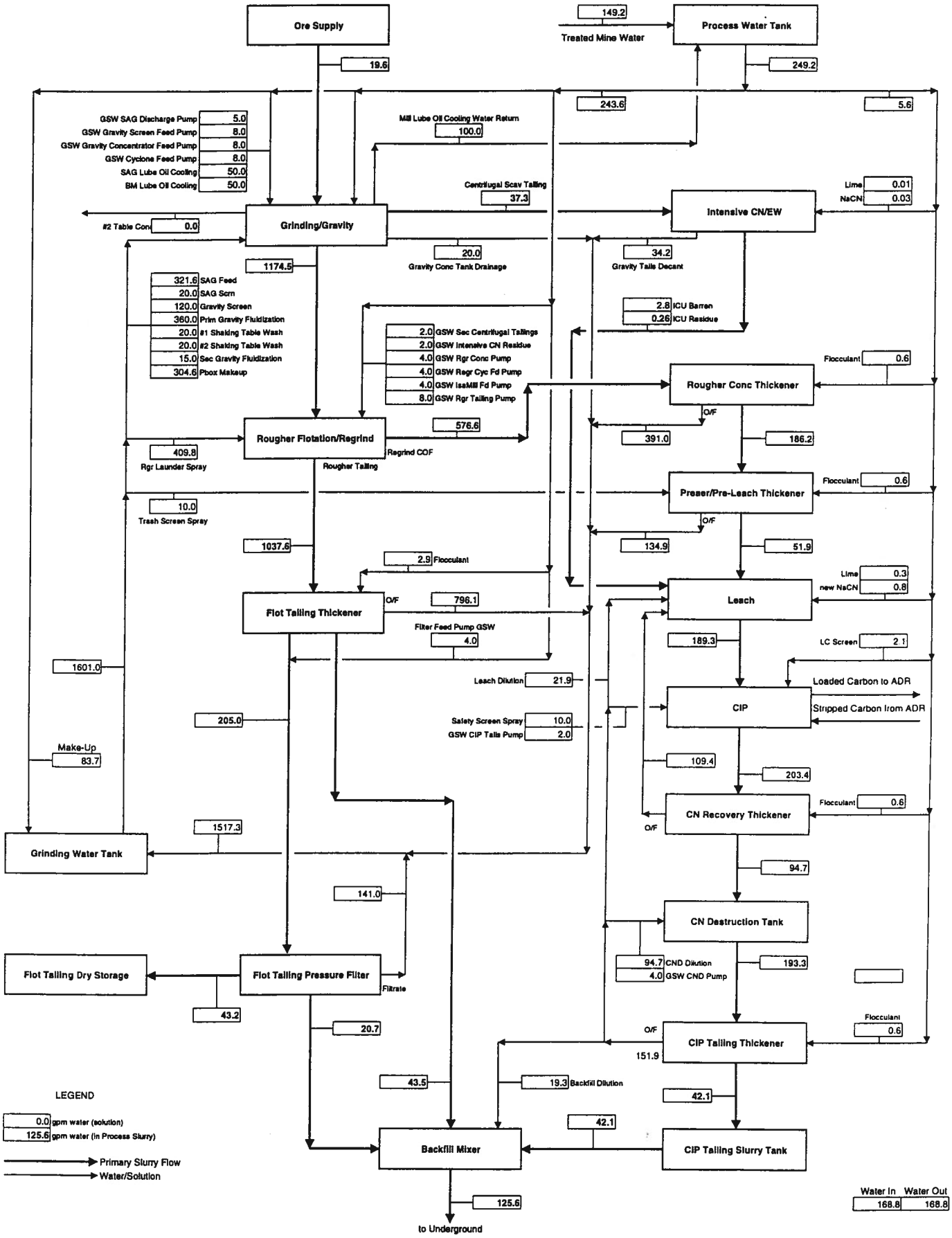

TECK-COMINCO
POGO PROJECT
PROJECT NO. U419F

DATE: January 10, 2002
REV: G

FLOTATION & LEACH/CIP PROCESS SOLIDS AND WATER BALANCE
WITH GRAVITY GOLD RECOVERY FROM CYCLONE FEED

Stream No.	Description	Solids tons/hr	Solution tons/hr	Slurry tons/hr	Solids S.G.	Density % solids	Slurry S.G.	Solids gpm	Solution gpm	Slurry gpm	Set Points
	CRUSHING, ORE STORAGE & RECLAIM										3500 tonnes/day, Mill Feed Rate
											2.71 Ore Specific Gravity
1	Primary Crusher Discharge	388.89	12.03	400.9	2.71	97.00	2.58	573.6	48.1	621.6	3.0 % moisture, ROM Ore
											75 %, Crusher Availability
	GRINDING										12 hours/day
											7 days/week
2	SAG Mill New Feed	158.51	4.90	163.4	2.71	97.00	2.58	233.8	19.6	253.4	
3	Water - SAG Mill Feed		80.45						321.6		92 %, Grinding Availability
4	SAG Mill Discharge	158.51	85.35	243.9	2.71	65.00	1.70	233.8	341.2	575.0	65 % solids, SAG Disch
5	Trommel Screen Spray Water		5.00						20.0		20 gpm, Trommel Screen Spray Water
6	GSW - SAG Discharge Pump		1.25						5.0		5 gpm, GSW - SAG Screen UF Pump
7	SAG Discharge to Gravity Screen Feed PB	158.51	91.61	250.1	2.71	63.37	1.67	233.8	366.2	600.0	90 % solids, SAG Screen O'Size
8	Ball Mill Discharge	435.11	186.48	621.6	2.71	70.00	1.79	641.7	745.3	1,387.1	
9	GSW - Gravity Screen Feed Pump		2.00						8.0		8 gpm, GSW - Gravity Screen Feed Pump
10	Total Slurry Feed to Gravity Screens	593.62	280.09	873.7	2.71	67.94	1.75	875.5	1,119.5	1,995.0	0.185 %, Gravity Wt Recovery
11	Water - Gravity Screen Spray		30.02						120.0		40 gpm, Screen Spray Water per unit (of 3)
12	Gravity Screen O'size to Cyclone Feed Pumpbox	118.72	20.95	139.7	2.71	85.00	2.16	175.1	83.7	258.9	20 wt %, +20 mesh solids @ 85% solids
13	GSW - Gravity Distributor Feed Pump		2.00						8.0		8 gpm, GSW - Gravity Distributor Feed Pun
14	Screen Undersize to Knelsons	474.90	291.16	766.1	2.71	61.99	1.64	700.4	1,163.8	1,864.2	
15	Water - Gravity Fluidization (x 2)		90.07						360.0		180 gpm, Gravity Fluidization Water per unit
16	Primary Gravity Concentrate	0.29	0.07	0.37	4.00	80.00	2.50	0.29	0.29	0.59	4 Primary Gravity Concentrate SG
17	Gravity Tailing to Cyclone Feed Pumpbox	474.61	381.15	855.8	2.71	55.46	1.54	700.2	1,523.5	2,223.7	80 % solids, Primary Gravity Concentrate
18	Water - SAG Mill Lube Cooling		12.51						50.0		50 gpm, SAG Mill Lube Cooling Water
19	Water - Ball Mill Lube Cooling		12.51						50.0		50 gpm, SAG Mill Lube Cooling Water
20	Water - BM Pumpbox Makeup		76.21						304.6		
21	GSW - Cyclone Feed Pump		2.00						8.0		8 gpm, GSW - Cyc Feed Pump
22	Cyclone Feed	593.33	480.31	1,073.6	2.71	55.26	1.54	875.4	1,919.8	2,795.2	275 %, Circulating Load, CUF
23	Cyclone Underflow	435.11	186.48	621.6	2.71	70.00	1.79	641.9	745.3	1,387.3	70 % solids, CUF
24	Ball Mill Cyclone Overflow	158.22	293.84	452.1	2.71	35.00	1.28	233.4	1,174.5	1,407.9	35 % solids, COF
	GRAVITY CONCENTRATE UPGRADING										
25	Primary Gravity Concentrate	0.293	0.07	0.37	4.00	80.00	2.50	0.29	0.29	0.59	
26	Recycled #2 Table Tailings	0.070	5.02	5.09	4.00	1.37	1.01	0.07	20.07	20.14	
27	Water Drainage from Concentrate Tank		5.00						20.00		
28	Feed to #1 Shaking Table	0.363	0.09	0.45	4.00	80.00	2.50	0.36	0.36	0.73	5 Concentration Ratio, Shaking Table #1
29	#1 Shaking Table Wash Water		5.00						20.00		20 gpm, Shaking Table Wash Water
30	#1 Shaking Table Concentrate	0.073	0.02	0.09	7.00	80.00	3.18	0.04	0.07	0.11	7 SG Table 1 Concentrate
31	#1 Shaking Table Tailings (Feed to Centrifugal)	0.291	5.08	5.37	3.25	5.41	1.04	0.36	20.29	20.65	80 % solids, Concentrate
32	Centrifugal Scavenger Fluidization Water		3.75						15.00		15 gpm, Fluidization Water
33	Centrifugal Scavenger Concentrate	0.032	0.01	0.04	5.00	80.00	2.78	0.03	0.03	0.06	
34	#2 Shaking Table Feed	0.105	0.03	0.13	6.00	80.00	3.00	0.07	0.10	0.17	5 SG Scav Concentrate
35	#2 Shaking Table Wash Water		5.00						20.00		3 Concentration Ratio, Shaking Table #2
36	#2 Shaking Table Concentrate	0.035	0.01	0.04	10.00	80.00	3.57	0.01	0.03	0.05	20 gpm, Shaking Table Wash Water
37	#2 Shaking Table Tailings	0.070	5.02	5.09	4.00	1.37	1.01	0.07	20.07	20.14	0.035 tons/day Gravity Conc
38	GSW - Centrifugal Scav Tailings Pump		0.50						2.00		2 gpm, GSW Centrifugal Scav Tails Pump
39	Centrifugal Scavenger Tailings to Decant Tank	0.258	9.32	9.58	3.03	2.70	1.02	0.34	37.26	37.60	10 SG Table 2 Concentrate
40	Decant Tank Overflow to Grinding Water Tank		8.56						34.20		4 SG Table 2 Tailings
41	Feed to Intensive Cyanidation Unit (ICU)	0.258	0.77	1.03	3.03	25.0	1.20	0.34	3.10	3.44	25 % solids, Intensive CN Feed
42	Lime		0.002						0.0		2.0 lb/ton solids Lime @ 12% slurry
43	New Cyanide Solution		0.008						0.0		5.4 lb/ton solution NaCN @ 25% conc
44	ICU Drum Discharge	0.258	0.77	1.03	3.03	25.0	1.20	0.34	3.10	3.44	
45	ICU Leach Residue	0.258	0.0646	0.32	3.03	80.0	2.16	0.34	0.26	0.60	80 % solids, leach residue
46	ICU Leach Solution to Electrowinning		0.71						2.84		
47	GSW - ICU Leach Residue Pump		0.50						2.00		2 gpm, GSW Intensive CN Leach Residue I
48	ICU Leach Residue to Small Regrind	0.258	0.56	0.82	3.03	31.37	1.27	0.34	2.26	2.60	

TECK COMINCO
POGO PROJECT
PROJECT NO. U419F

FLOTATION & LEACH/CIP PROCESS SOLIDS AND WATER BALANCE
WITH GRAVITY GOLD RECOVERY FROM CYCLONE FEED

DATE: January 10, 2002
REV: G

Stream No.	Description	Solids tons/hr	Solution tons/hr	Slurry tons/hr	Solids S.G.	Density % solids	Slurry S.G.	Solids gpm	Solution gpm	Slurry gpm	Set Points
	ROUGHER FLOTATION										
49	Rougher Flotation Feed	158.22	293.84	452.1	2.71	35.00	1.28	233.4	1,174.5	1,407.9	9.815 Wt, Rougher Conc
50	Rougher Concentrate Stage 1	6.04	14.08	20.1	3.00	30.00	1.25	8.0	56.3	64.3	3.0 SG solids, Rougher Conc
51	Water - Stage 1 Launder		20.61						82.4		30 % solids, Rougher Conc over Lip
52	Rougher Concentrate Stage 2	3.96	9.23	13.2	3.00	30.00	1.25	5.3	36.9	42.2	gpm, Rougher Launder Water, each
53	Water - Stage 2 Launder		25.46						101.8		3.815 Wt%, Stage 1
54	Rougher Concentrate Stage 3	3.16	7.38	10.5	3.00	30.00	1.25	4.2	29.5	33.7	2.5 Wt%, Stage 2
55	Water - Stage 3 Launder		27.31						109.1		2 Wt%, Stage 3
56	Rougher Concentrate Stage 4	2.37	5.54	7.9	3.00	30.00	1.25	3.2	22.1	25.3	1.5 Wt%, Stage 4
57	Water - Stage 4 Launder		29.15						116.5		10 % solids, Rougher Conc to Regrinding
58	Total Rougher Launder Water		102.53						409.8		
59	GSW - Rougher Conc Pump		1.00						4.0		4 gpm, GSW Rougher Conc Pump
60	Rougher Concentrate to Regrind	15.53	139.76	155.3	3.00	10.00	1.07	20.7	558.6	579.3	
61	Rougher Tailings	142.69	257.60	400.3	2.68	35.65	1.29	213.0	1,029.6	1,242.7	
	ROUGHER CONCENTRATE REGRINDING										
62	Rougher Concentrate to Regrind Feed	15.53	139.76	155.3	3.00	10.00	1.07	20.7	558.6	579.3	
63	Water - Trash Screen Spray		2.50						10.0		10 gpm, Trash Screen Spray
64	Total Feed to Regrind	15.53	142.3	157.8	3.00	9.84	1.07	20.7	568.6	589.3	
65	GSW - Regrind Cyc Feed Pump		1.00						4.0		4 gpm, GSW Regr Cyc Feed Pump
66	Regrind Cyclone Feed	62.1	214.2	276.3	3.00	22.48	1.18	82.8	856.0	938.7	40 % solids, Regrind CUF
67	Regrind Cyclone Underflow	46.6	69.88	116.5	3.00	40.0	1.36	62.1	279.3	341.4	300 %, Circulating Load, CUF
68	GSW - IsaMill Feed Pump		1.00						4.0		4 gpm, GSW IsaMill Feed Pump
69	IsaMill Feed	23.3	35.94	59.2	3.00	39.32	1.36	31.0	143.7	174.7	
70	Regrind Cyclone Overflow to Thickener	15.53	144.27	159.8	3.00	9.72	1.07	20.7	576.6	597.3	
	ROUGHER TAILING DEWATERING										
71	GSW - Rougher Tailing Pump		2.00						8.0		8 gpm, GSW Rougher Tailing Pump
72	Rougher Tailing to Deep Cone Thickener	142.69	259.61	402.3	2.68	35.47	1.29	213.0	1,037.6	1,250.7	0.05 lb/ton, Flocc Tailing Thickener
73	Flocculant to Thickener		0.71						2.9		0.50 %, Flocculant Concentration
74	Flot Tailings Thickener U'Flow Recycle	428.08	183.46	611.5	2.68	70.00	1.78	639.0	733.3	1,372.3	300% Deep Cone Thickener U'Flow Recycle Ra
75	Flot Tailings Thickener U'Flow Pumping Rate	570.77	244.61	815.4	2.68	70.00	1.78	852.0	977.7	1,829.8	70 %solids, Thickener Underflow
76	Flot. Tailing Thick O'flow to Grinding Water Tank		199.17						796.1		
77	Flot. Tailing Thickener Underflow to Paste Mixer	25.37	10.87	36.2	2.68	70.00	1.78	37.9	43.5	81.3	60 % solids, Slurry Storage Tank
78	GSW - Filter Feed Pump		1.00						4.0		4 gpm, GSW Filter Feed Pump
79	Flot. Tailing Slurry to Pressure Filter	117.32	51.28	168.6	2.68	69.58	1.77	175.1	205.0	380.1	
80	Avg. Pressure Filter Cake to Dry Tailing	79.27	10.81	90.1	2.68	88.00	2.23	118.3	43.2	161.5	12 % moist, Flot. Tailing Filter Cake
81	Avg. Pressure Filter Cake to Paste	38.05	5.19	43.2	2.68	88.00	2.23	56.8	20.7	77.5	55.555556 % Filter Cake to Dry Tailing
82	Flot. Tailing Pressure Filter Filtrate		35.28						141.0		
	CONCENTRATE THICKENING										
83	Rougher Concentrate to Concentrate Thickener	15.53	144.27	159.8	3.00	9.72	1.07	20.7	576.6	597.3	0.10 lb/ton, Flocc Conc Thickener
84	Floccculant		0.16						0.6		0.50 %, Flocculant Concentration
85	Concentrate Thickener Underflow	15.53	46.59	62.1	3.00	25.00	1.20	20.7	186.2	206.9	25 % solids, Thickener Underflow
86	Thickener Overflow to Grinding Water Tank		97.84						391.0		
	ROUGHER CONCENTRATE PRE-AERATION, PRELEACH THICKENING & CN LEACH										
87	Feed to Rougher Concentrate Pre-aeration	15.53	46.59	62.1	3.00	25.00	1.20	20.7	186.2	206.9	
88	Feed to PreLeach Thickener	15.53	46.59	62.1	3.00	25.00	1.20	20.7	186.2	206.9	0.10 lb/ton, Flocc Conc Thickener
89	Floccculant		0.16						0.6		0.50 %, Flocculant Concentration
90	PreLeach Thickener Underflow	15.53	12.99	28.5	3.00	54.45	1.57	20.7	51.9	72.6	
91	Thickener Overflow to Grinding Water Tank		33.75						134.9		

TECK-COMINCO
POGO PROJECT
PROJECT NO. U419F

DATE: January 10, 2002
REV: G

FLOTATION & LEACH/CIP PROCESS SOLIDS AND WATER BALANCE
WITH GRAVITY GOLD RECOVERY FROM CYCLONE FEED

Stream No.	Description	Solids tons/hr	Solution tons/hr	Slurry tons/hr	Solids S.G.	Density % solids	Slurry S.G.	Solids gpm	Solution gpm	Slurry gpm	Set Points
92	Thickener Underflow to CN Leach	15.53	12.99	28.5	3.00	54.45	1.57	20.7	51.9	72.6	1.0 lb/ton, Lime
93	Reground ICU Leach Residue to Flotation Leach	0.26	0.56	0.8	3.03	31.37	1.27	0.3	2.3	2.6	
94	Lime		0.06						0.3		12 %, Lime Concentration
95	New Cyanide Solution		0.19						0.8		2.0 lb/t solution, NaCN
96	Intensive CN Barren Solution		0.71						2.8		
97	Recycled CN Recovery Thick OF to Leach Feed		27.36						109.4		
98	CIP Tailings Thickener Overflow to Leach Feed		5.48						21.9		25 %, NaCN Concentration
99	Leach Tank Feed	15.79	47.36	63.2	3.00	25.00	1.20	21.0	189.3	210.3	90.0 % New NaCN Required
100	Leach Tank Discharge	15.79	47.36	63.2	3.00	25.00	1.20	21.0	189.3	210.3	100 % New NaCN Added
											25 % solids, Leach Feed
	CIP, CN RECOVERY & CYANIDE DESTRUCTION										
101	Feed to CIP	15.79	47.36	63.2	3.00	25.00	1.20	21.0	189.3	210.3	
102	Slurry to Loaded Carbon Screen	15.01	45.03	60.0	3.00	25.00	1.20	20.00	180.0	200.0	200 gpm, Loaded Carbon Pump
103	Water - LC Screen Spray (Instantaneous)		2.50						10.0		10 gpm, Loaded Carbon Screen Spray
104	CIP Flow During Carbon Advance	30.80	94.90	125.7	3.00	24.50	1.20	41.0	379.3	420.3	5 hrs/day, Loaded Carbon Transfer
105	Water - LC Screen Spray (24-hr avg)		0.52						2.1		10 gpm, Safety Screen Spray
106	#6 CIP Tank Discharge	15.79	47.88	63.7	3.00	24.80	1.20	21.0	191.4	212.4	
107	CIP Thickener OF to Safety Screen Spray		2.50						10.0		
108	GSW - CIP Tails Pump		0.50						2.0		2 gpm, GSW CIP Tails Pump
109	Feed to CN Recovery Thickener	15.79	50.89	66.7	3.00	23.68	1.19	21.0	203.4	224.4	0.10 lb/ton, Flocc CIP Tailing Thickener
110	Flocculant		0.16						0.6		0.50 %, Flocculant Concentration
111	CN Recovery Thickener Overflow		27.36						109.4		
112	CN Recovery Thickener Underflow	15.79	23.68	39.5	3.00	40.00	1.36	21.0	94.7	115.7	40 % solids, CN Recov Thick UF
113	CIP Tailing Thickener OF to CN Destruction		23.68						94.7		
114	Feed to Cyanide Destruction Tank	15.79	47.36	63.2	3.00	25.00	1.20	21.0	189.3	210.3	25 % solids, CN Destruction
115	GSW - CN Destruct Pump		1.00						4.0		4 gpm, GSW CN Destruct Pump
116	Discharge from Cyanide Destruction	15.79	48.36	64.2	3.00	24.61	1.20	21.0	193.3	214.3	
	CIP TAILING DEWATERING										
											0.10 lb/ton, Flocc CIP Tailing Thickener
117	Flow from Cyanide Destruction	15.79	48.36	64.2	3.00	24.61	1.20	21.0	193.3	214.3	0.50 %, Flocculant Concentration
118	Flocculant		0.16						0.6		60 % solids, CIL Tailing Deep Cone Thick U/
119	Feed to CIP Tailing Deep Cone Thickener	15.79	48.52	64.3	3.00	24.55	1.20	21.0	193.9	215.0	
120	CIP Tailing Thickener Overflow		38.00						151.9		
121	CIP Tailing Thickener OF to CN Destruction		23.68						94.7		
122	CIP Tailing Thickener OF to Paste Backfill		4.83						19.3		
123	CIP Tailing Thickener OF to Leach Feed		5.48						21.9		
124	CIP Tailing Thickener OF to CIP Tails Pump GSW		0.50						2.0		
125	CIP Tailing Thickener OF to CND Pump GSW		1.00						4.0		
126	CIP Tailing Thickener OF to Safety Screen Spray		2.50						10.0		
127	Thickener Underflow Pumping Rate	63.2	42.10	105.3	3.00	60.0	1.67	84.1	168.3	252.4	300 % Recycle, Thickener Underflow
128	Thickener Underflow to Storage Tank	15.79	10.53	26.3	3.00	60.00	1.67	21.0	42.1	63.1	(ODS Pump on Thickener U/F)
129	Instantaneous Feed to CIP Tailing Paste Mixer	31.58	21.05	52.6	3.00	60.00	1.67	42.1	84.1	126.2	
	BACKFILL PRODUCTION										
130	Filtered Flot Tailing to Backfill Mixer (24 hr avg)	38.05	5.19	43.2	2.68	88.00	2.23	56.8	20.7	77.5	Note: These are 24-hr Average Flowrates
131	Flot Tailing Thickener U'flow to Mixer (24 hr avg)	25.37	10.87	36.24	2.68	70.00	1.78	37.9	43.5	81.3	with 92% availability factor
132	CIP Tailing Slurry to Backfill Mixer (24 hr avg)	15.79	10.53	26.3	3.00	60.00	1.67	21.0	42.1	63.1	2 % Cement to Backfill
133	Cement to Paste Mixer (24 hr avg)	1.58	0.00	1.6	3.15	100.00	3.15	2.0	-	2.0	3.15 Cement SG
134	Water - Backfill Dilution (24 hr avg)		4.83						19.3		
135	Backfill to Mine 24-hr Average	80.79	31.42	112.2	2.75	72.00	1.85	117.4	125.6	243.0	72 % solids, Paste Density
136	Backfill to Mine @ Design Operating Time	148.65	57.81	206.5	2.75	72.00	1.85	216.1	231.1	447.1	50 % Backfill Operating Time
											(92% availability factor removed)