STATE OF ALASKA
DEPARTMENT OF NATURAL RESOURCES
DIVISION OF PARKS AND OUTDOOR RECREATION

KASILOF RIVER SUA NORTH SITE IMPROVEMENTS

PROJECT NO. 76058-1

In Cooperation with the Division of Mining, Land & Water

Vicinity Map

SECTION 36, TOWNSHIP 4 NORTH, RANGE 12 WEST, SEWARD MERIDIAN, USGS QUAD KENAI B-4

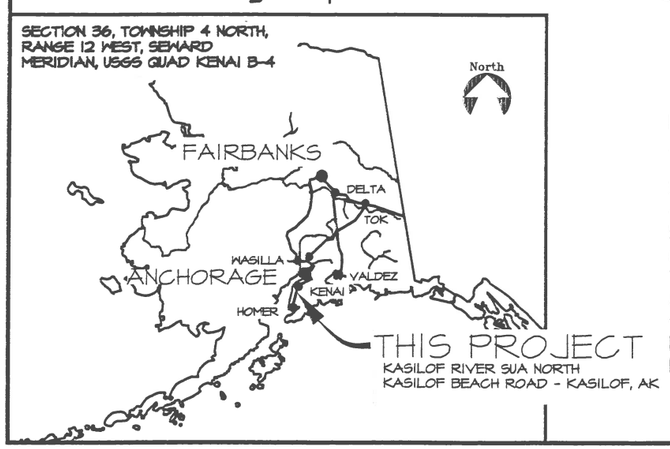

INDEX

1. TITLE SHEET
2. LEGEND, ABBREVIATIONS, ESTIMATE OF QUANTITIES, & SUMMARY TABLES
3. SIGN SUMMARY & CULVERT SUMMARY
4. VICINITY MAP
5. EXISTING SITE PLAN
6. SITE OVERVIEW
7. PARKING AREA OVERVIEW
8. TURNAROUND OVERVIEW
9. PLAN & PROFILE STA 10+00 TO 20+00
10. PLAN & PROFILE STA 20+00 TO 29+54.37
11. PLAN & PROFILE PARKING AREA
12. BEACH ACCESS ROAD
13. TYPICAL SECTIONS
14. TYPICAL SECTIONS 2
15. DETAILS
16. ELP WALKWAY PILE LOCATIONS AND HELICAL PILE DETAIL
17. ELP WALKWAY FRAMING PLAN
18. ELP WALKWAY ELEVATION
19. RAIL DETAILS
20. STRIPING PLAN AND KIOSK DETAILS

The following Division of Parks & Outdoor Rec. standard drawings apply to this project: P-5, S-10D
The following D.O.T.(Highways) standard drawings apply to this project: D-01.02, G-04.105, G-10.01, I-20.20, I-30.10, S-01.00, S-05.01, T-32.10, T-34.01

PLANS DEVELOPED BY:
DEPARTMENT OF NATURAL RESOURCES
550 W 7TH AVE SUITE 1340
ANCHORAGE, AK 99501
907. 269. 8731

STATE OF ALASKA
Department of Natural Resources
Division of Parks & Outdoor Recreation

Recommended: 8/24/16
Rob Miranda — Date
Chief, Design and Construction

Approved: 8/25/16
Brent Goodrum — Date
Director, Mining, Land & Water

LEGEND

EXISTING	PROPOSED	
		EDGE OF PCC PAVEMENT
		EDGE OF VEGETATION
		EDGE OF WATER
100	100	MAJOR CONTOUR LINE
		MINOR CONTOUR LINE
		EDGE OF ROAD/PARKING
		LIMIT OF FILL SLOPE
		LIMIT OF CUT SLOPE
		DUNE FENCING
		CULVERT
		SURVEY CONTROL MONUMENT
		WOODEN BOLLARD / BARRIER POST
		BARRIER ROCK
		SIGN
		ORIENTATION KIOSK
		BUOY
		TREE

ABBREVIATIONS

Φ	DIAMETER
℄	CENTERLINE
AC	ASPHALT CONCRETE
APPRX.	APPROXIMATE
BVCE	BEGIN VERTICAL CURVE ELEVATION
BVCS	BEGIN VERTICAL CURVE STATION
BLDG	BUILDING
C.F.	CUBIC FOOT
C.S.	CONTINGENT SUM
CSP	CORRUGATED STEEL PIPE
C.Y.	CUBIC YARD
ELEV	ELEVATION
EST.	ESTIMATE
EVCE	END VERTICAL CURVE ELEVATION
EVCS	END VERTICAL CURVE STATION
IN.	INCH
INV.	INVERT
LB/LBS	POUND/POUNDS
L.F.	LINEAR FEET
L.S.	LUMP SUM
MIN	MINIMUM
M.E.	MATCH EXISTING
MP	MILEPOST
NO.	NUMBER
OE	OVERHEAD ELECTRICAL
OHW	ORDINARY HIGH WATER
PCC	PORTLAND CEMENT CONCRETE
PVC	POLYVINYL CHLORIDE
QTY.	QUANTITY
REQ'D	REQUIRED
S.F	SQUARE FEET
STA	STATION
S.Y	SQUARE YARD
TYP.	TYPICAL

ESTIMATE OF QUANTITIES

ITEM	DESCRIPTION	UNIT	QTY
201(3A)	CLEARING AND GRUBBING	ACRE	3.2
202(1)	REMOVAL OF STRUCTURES AND OBSTRUCTIONS	L.S.	ALL REQ'D
203(3)	UNCLASSIFIED EXCAVATION	C.Y.	1,000
203(6A)	BORROW, TYPE A	C.Y.	11,385
301(1)	AGGREGATE BASE COURSE, GRADING D-1	TON	4,400
401(1B)	HOT MIX ASPHALT, TYPE II; CLASS B	TON	1,240
303(1)	RECONDITIONING	STATION	20
505(5)	FURNISH STRUCTURAL STEEL HELICAL PILE	L.F.	180
505(12)	DRIVE STRUCTURAL STEEL HELICAL PILE	EACH	12
603(1)	18 INCH CSP	L.F.	220
603(3)	END SECTION FOR 18 INCH CSP	EACH	8
604(8)	CURB DRAIN	EACH	1
606(1)	W-BEAM GUARDRAIL	L.F.	2,833
606(13)	PARALLEL GUARDRAIL TERMINAL	EACH	4
607(7)	DUNE FENCING	L.F.	3,180
609(2)	CURB AND GUTTER, TYPE 1	L.F.	1,600
611(1)	RIPRAP, CLASS 1	TON	15
615(1)	STANDARD SIGN	S.F.	129.75
618(2)	SEEDING	POUND	41
620(1)	TOPSOIL, CLASS B	S.Y.	4,450
630(1)	GEOTEXTILE, SEPARATION	S.Y.	10,360
640(1)	MOBILIZATION AND DEMOBILIZATION	L.S.	ALL REQ'D
641(1)	EROSION, SEDIMENT, AND POLLUTION CONTROL ADMINISTRATION	L.S.	ALL REQ'D
641(2)	TEMPORARY EROSION, SEDIMENT, AND POLLUTION CONTROL	C.S.	ALL REQ'D
641(6)	SWPPP PRICE ADJUSTMENT	C.S.	ALL REQ'D
642(1)	CONTRUCTION SURVEYING	L.S.	ALL REQ'D
642(3)	THREE PERSON SURVEY PARTY	HOUR	15
643(2)	TRAFFIC MAINTENANCE	L.S.	ALL REQ'D
646(1)	CPM SCHEDULING	L.S.	ALL REQ'D
647(6)	HYDRAULIC EXCAVATOR, 1 CY, 100HP MINIMUM	HOUR	20
650(12)	ELP WALKWAY	L.S.	ALL REQ'D
650(20A)	REMOVABLE BARRIER POST	EACH	2
650(21)	BARRIER ROCK	EACH	37
650(39B)	ORIENTATION KIOSK	EACH	1
669(1)	AUTOMATED TRAFFIC RECORDER	EACH	2
670(1)	TRAFFIC MARKINGS	L.S.	ALL REQ'D

ITEM NO. 603(1) 18 INCH CSP & ITEM NO. 603(3) END SECTION FOR 18 INCH CSP

QTY.	DESCRIPTION	LOCATION / COMMENTS
40 L.F.	18"Φ CULVERT W/ END SECTIONS (2 EACH)	STA. 71+10
40 L.F.	18"Φ CULVERT W/ END SECTIONS (2 EACH)	STA. 14+10
40 L.F.	18"Φ CULVERT W/ END SECTIONS (2 EACH)	STA. 75+90
100 L.F.	18"Φ CULVERT W/ END SECTIONS (2 EACH)	STA. 18+84

TABLE OF ESTIMATING FACTORS

ITEM NO.	ITEM DESCRIPTION	EST. FACTOR
301(1)	AGGREGATE BASE COURSE, GRADING D-1	148 LB. / C.F.
401(1B)	HOT MIX ASPAHLT, TYPE II; CLASS B	115 LB. / S.Y.-IN.
611(1)	RIPRAP, CLASS 1	115.5 LB. / C.F.

STATE OF ALASKA 49TH Lucas M. Randall CE - 12595 8/25/16 Registered Professional Engineer

PLANS DEVELOPED BY:
DEPARTMENT OF NATURAL RESOURCES
550 W 7TH AVE SUITE 1340
ANCHORAGE, AK 99501
907. 269. 8731

STATE OF ALASKA DEPARTMENT OF NATURAL RESOURCES

LEGEND, ABBREVIATIONS, ESTIMATE OF QUANTITIES, & SUMMARY TABLES

KASILOF RIVER SUA
NORTH SITE IMPROVEMENTS
PROJECT No. 76058-1

PREPARED: LGN
DRAWN: LGN
REVIEWED: LMR
DATE: 05/20/2016

SHEET 2 OF 20 SHEETS

ITEM 615(1) STANDARD SIGN										
SIGN NO	LOCATION	OFFSET (FT)	TYPE	LEGEND	SIGN (INXIN)	AREA (S.F.)	THICKNESS (IN)	SIGN POST DATA		
								TYPE	SIZE (IN)	NO.
S1	11+58	17R	R2-1	SPEED LIMIT 25	24x30	5.0	0.125	PT	2.5X2.5	1
S2	13+36	23R	R6-1R	ONE WAY	36X12	3.0	0.125	PT	2.5X2.5	1
S3	13+32	23R	R6-1L	ONE WAY	36X12	3.0	0.125	BACKSIDE OF S2		
S4	71+23	9R	R2-1	SPEED LIMIT 10	24x30	5.0	0.125	PT	2.5X2.5	1
S6	51+93	9R	"		"	"	"	"	"	"
S5	71+23	9R	R5-1	DO NOT ENTER	30X30	6.25	0.125	BACKSIDE OF S4		
S7	51+93	9R	"		"	"	"	BACKSIDE OF S6		
S16	18+60	23R	"		"	"	"	BACKSIDE OF S15		
S8	55+64	54R	R7-8	RESERVED PARKING	12X18	1.5	0.125	PT	2.5X2.5	1
S10	55+86	54R	"		"	"	"	"	"	"
S12	55+88	34L	"		"	"	"	"	"	"
S13	55+78	34L	"		"	"	"	"	"	"
S14	55+68	34L	"		"	"	"	"	"	"
S9	55+64	54R	R7-8A	VAN ACCESSIBLE	12X6	0.5	0.125	BELOW S8		
S11	55+86	54R	"		"	"	"	BELOW S10		
S15	18+60	23R	R1-1	STOP	30X30	6.25	0.125	PT	2.5X2.5	1
S18	20+18	28R	"		"	"	"	"	"	"
S24	10+08	16L	"		"	"	"	"	"	"
S40	24+18	25L	"		"	"	"	"	"	"
S19	20+50	17L	RTP-101LR	NO PARKING ANY TIME	12X18	1.5	0.125	PT	2.5X2.5	1
S20	19+44	24L	"		"	"	"	"	"	"
S21	18+54	98L	"		"	"	"	"	"	"
S22	17+54	21L	"		"	"	"	"	"	"
S23	14+90	18L	"		"	"	"	"	"	"
S25	21+17	17R	"		"	"	"	"	"	"
S26	22+50	15R	"		"	"	"	"	"	"
S27	24+00	15R	"		"	"	"	"	"	"
S28	25+50	15R	"		"	"	"	"	"	"
S29	27+00	15R	"		"	"	"	"	"	"
S30	29+50	15R	"		"	"	"	"	"	"
S31	FIELD LOCATED		"		"	"	"	"	"	"
S32	FIELD LOCATED		"		"	"	"	"	"	"
S33	27+68	15R	"		"	"	"	"	"	"
S34	26+40	50L	"		"	"	"	"	"	"
S35	25+97	19L	"		"	"	"	"	"	"
S38	25+05	30L	"		"	"	"	"	"	"
S39	24+30	98L	"		"	"	"	"	"	"
S41	23+45	40L	"		"	"	"	"	"	"
S42	21+98	19L	"		"	"	"	"	"	"
S17	0+50	15R	CS-1	BEACH ACCESS LOOSE SAND AHEAD	24X24	4	0.125	PT	2.5X2.5	1
S49	28+00	15R	"		"	"	"	"	"	"
S36	25+19	45L	RTP-103	NO PARKING EMERGENCY VEHICLES ONLY	12X18	1.5	0.125	PT	2.5X2.5	1
S37	25+05	45L	"		"	"	"	"	"	"
				CONTINUED						

ITEM 615(1) STANDARD SIGN										
SIGN NO	LOCATION	OFFSET (FT)	TYPE	LEGEND	SIGN (INXIN)	AREA (S.F.)	THICKNESS (IN)	SIGN POST DATA		
								TYPE	SIZE (IN)	NO.
S43	19+79	20R	R1-5R	HERE	24X24	4	0.125	PT	2.5X2.5	1
S44	20+18	28R	"		"	"	"	BELOW SIGN 18		
S45	25+57	27R	R5-3AP	PATHWAY	18X6	0.75	0.125	ABOVE SIGN 46		
S47	29+15	15R	"		"	"	"	ABOVE SIGN 48		
S46	20+57	27R	R5-3A	NO MOTOR VEHICLES	18X24	3	0.125	PT	2.5X2.5	1
S48	29+15	15R	"		"	"	"	"	"	"
				TOTALS		129.75		PT	2.5	39

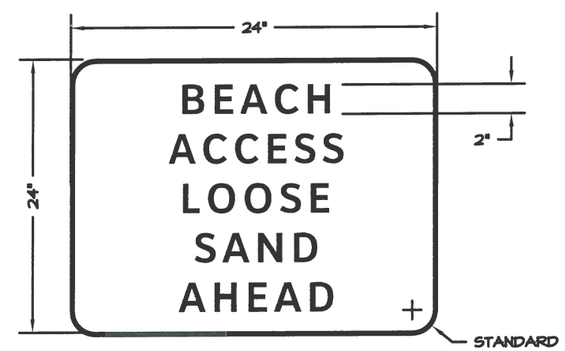

NOTE: CS-1 SHALL BE BLACK TEXT ON YELLOW BACKGROUND. 1/4" BORDER. CLEARVIEW FONT.

NOTES:

1. PT = PERFORATED STEEL TUBING
2. " = SAME AS ABOVE
3. SIGN LOCATIONS ON SITE PLAN ARE APPROXIMATE AND WILL BE FIELD VERIFIED BY THE DEPARTMENT
4. SIGNS SHALL BE CONSTRUCTED IN ACCORDANCE WITH THE ALASKA SIGN MANUAL
5. SIGNS SHALL HAVE CONCRETE BASES
6. SIGNS 31&32 WILL BE FIELD LOCATED BY THE ENGINEER

STATE OF ALASKA 49TH Lucas M. Randall CE – 12595 4/25/16 Registered Professional Engineer

PLANS DEVELOPED BY:
DEPARTMENT OF NATURAL RESOURCES
550 W 7TH AVE SUITE 1340
ANCHORAGE, AK 99501
907. 269. 8791

STATE OF ALASKA DEPARTMENT OF NATURAL RESOURCES

SIGN SUMMARY & CULVERT SUMMARY

KASILOF RIVER SUA
NORTH SITE IMPROVEMENTS
PROJECT No. 76058-1

PREPARED: LGN
DRAWN: LGN
REVIEWED: LMR
DATE: 05/20/2016

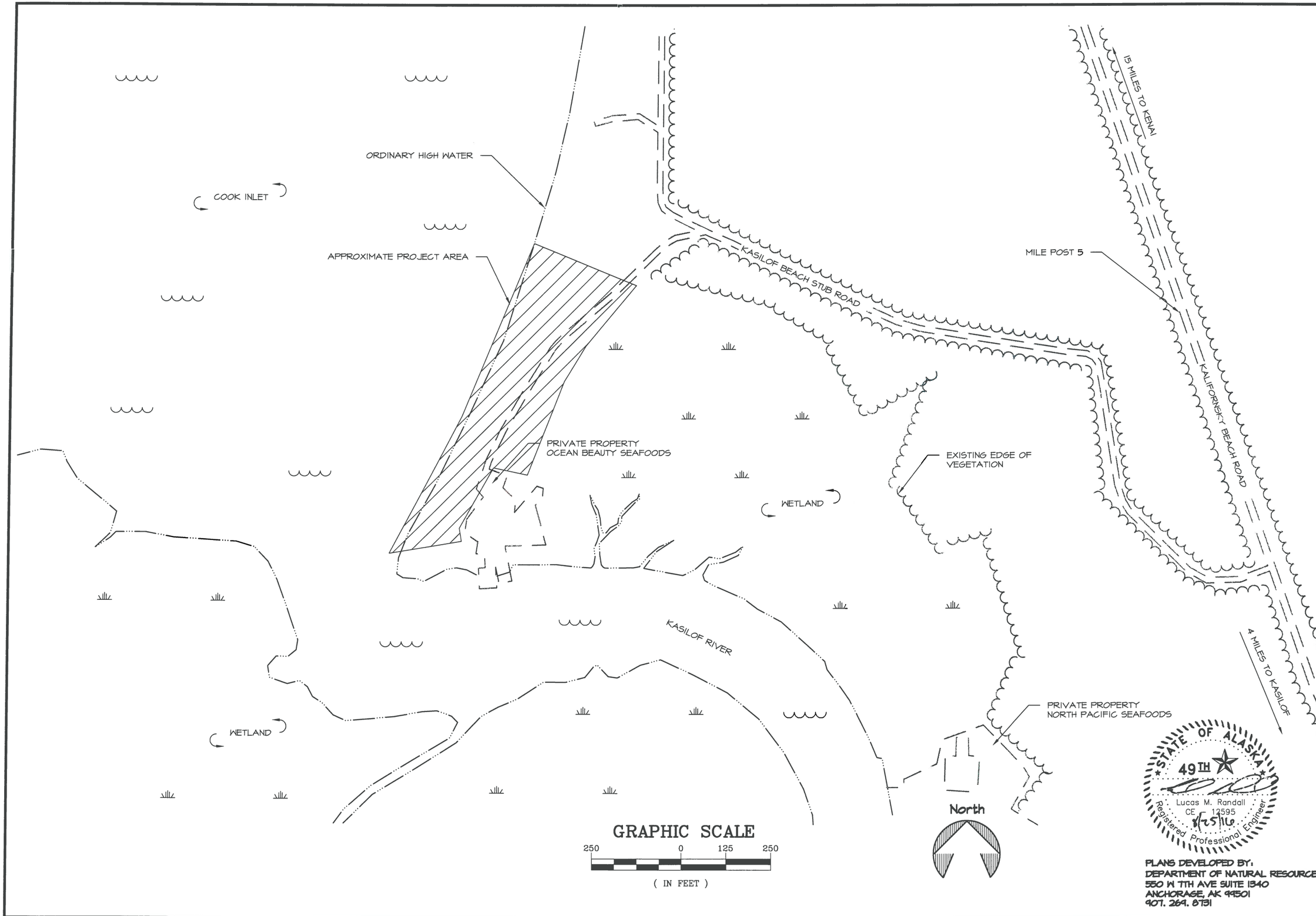

STATE OF ALASKA
49TH
Lucas M. Randall
CE 12595
8/25/16
Registered Professional Engineer

PLANS DEVELOPED BY:
DEPARTMENT OF NATURAL RESOURCES
550 W 7TH AVE SUITE 1340
ANCHORAGE, AK 99501
907. 269. 8731

STATE OF ALASKA DEPARTMENT OF NATURAL RESOURCES

KASILOF RIVER SUA
NORTH SITE IMPROVEMENTS
PROJECT No. 76058-1

VICINITY MAP

PREPARED: KML
DRAWN: KML
REVIEWED: LMR
DATE: 07/25/16

SHEET 4 OF 20 SHEETS

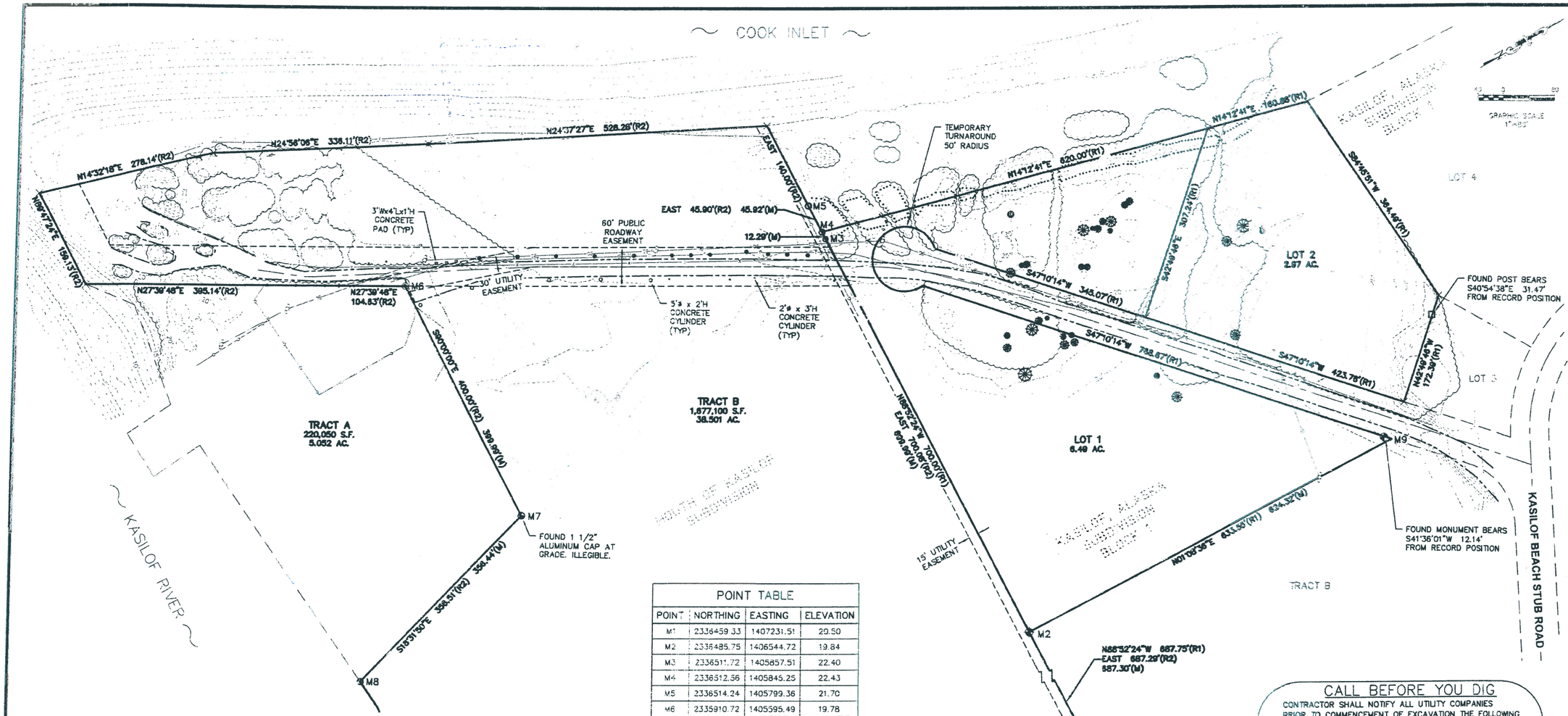

POINT TABLE			
POINT	NORTHING	EASTING	ELEVATION
M1	2336459.33	1407231.51	20.50
M2	2336485.75	1406544.72	19.84
M3	2336511.72	1405857.51	22.40
M4	2336512.56	1405845.25	22.43
M5	2336514.24	1405799.36	21.70
M6	2335910.72	1405595.49	19.78
M7	2335895.36	1405995.19	18.52
M8	2335553.34	1406095.57	16.99
M9	2337109.87	1406560.53	25.06

LEGEND

	FOUND 1 1/2" BRASS CAP		PROPERTY LINES
	FOUND 1 1/2" ALUMINUM CAP		ADJACENT PROPERTY LINES
	FOUND YELLOW PLASTIC CAP		EASEMENT
	FOUND REBAR		ROAD CENTERLINE
	FOUND IRON PIPE		EDGE OF GRAVEL
	FOUND WOOD POST		CHAIN LINK FENCE
X	COMPUTED (NOT FOUND, NOT SET)		MESHED PLASTIC FENCE
	POWER POLE		OVERHEAD ELECTRIC LINE
	SIGN		UNDERGROUND ELECTRIC LINE
	GUY WIRE		UNDERGROUND TELEPHONE LINE
	BUOY		EDGE OF VEGETATION
	TREE		TOP OF 3' BERM
(R1)	RECORD PLAT 83-166 (KRD)		CONTOURS
(R2)	RECORD PLAT 88-60 (KRD)		
KRD	KENAI RECORDING DISTRICT		
(M)	MEASURED		

SURVEY NOTES

1. ALL COORDINATES SHOWN ARE ALASKA STATE PLANE, ZONE 4, NAD83, US SURVEY FEET, AND ARE BASED ON THE F. ROBERT BELL & ASSOCIATES SURVEY CONDUCTED IN SEPTEMBER 2015. THE STATE PLANE VALUES LISTED IN THE OPUS SOLUTION REPORT FOR MONUMENT M3 WERE CONVERTED TO US SURVEY FEET AND HELD FOR THIS SURVEY. ALL OTHER COORDINATES WERE DETERMINED BY GPS OBSERVATION.
2. ALL ELEVATIONS ARE NAVD88 (OPUS DERIVED FROM GEOID 12B) AND ARE BASED ON A F. ROBERT BELL & ASSOCIATES SURVEY CONDUCTED IN SEPTEMBER 2015. THE PUBLISHED ORTHOMETRIC HEIGHT LISTED IN THE OPUS SOLUTION REPORT FOR MONUMENT M3 WAS CONVERTED TO US SURVEY FEET AND HELD FOR THIS SURVEY. ALL OTHER ELEVATIONS WERE DETERMINED BY GPS OBSERVATION.
3. METRIC TO FOOT CONVERSIONS ARE BASED ON THE US SURVEY FOOT (1 METER = 39.37 INCHES).
4. ALL MEASURED DISTANCES SHOWN ARE ALASKA STATE PLANE, ZONE 4, NAD83 IN US SURVEY FEET.
5. FIELD SURVEY INFORMATION FOR THIS PROJECT IS LOCATED IN F. ROBERT BELL & ASSOCIATES SURVEYING FIELD BOOK NO. 2015-05, PAGES 3-18.
6. UNDERGROUND UTILITY LOCATE REQUESTS WERE COORDINATED BY ALASKA DIGLINE, INC.
7. UNDERGROUND NATURAL GAS, ELECTRIC, AND COMMUNICATION LINES WERE FIELD LOCATED. PRIVATE SERVICE LINES WERE NOT FIELD LOCATED.

M2
FOUND 1 1/2" BRASS CAP 0.1' BELOW GRADE.

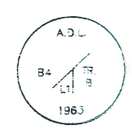

M9
FOUND 1 1/2" BRASS CAP 0.1' BELOW GRADE.

SURVEYOR'S CERTIFICATE

I HEREBY CERTIFY THAT I AM PROPERLY REGISTERED AND LICENSED TO PRACTICE LAND SURVEYING IN THE STATE OF ALASKA, THAT THIS DRAWING REPRESENTS A SURVEY MADE BY ME OR UNDER MY DIRECT SUPERVISION, THAT THE MONUMENTS SHOWN HEREON ACTUALLY EXIST AS DESCRIBED, AND THAT ALL DIMENSIONS AND OTHER DETAILS ARE CORRECT.

SIGNATURE _____ DATE DECEMBER 10, 2015

BRENDAN M. WELSH
LICENSE No. 14831-S

STATE OF ALASKA 49TH BRENDAN M. WELSH 14831-S 12-10-15 PROFESSIONAL LAND SURVEYOR

CALL BEFORE YOU DIG

CONTRACTOR SHALL NOTIFY ALL UTILITY COMPANIES PRIOR TO COMMENCEMENT OF EXCAVATION THE FOLLOWING IS A PARTIAL LIST:

STATE STORM/STREETLIGHTS	333-2411
ALASKA RAILROADS	265-2520
MILITARY FUEL LINES	522-3760
LOCATE CENTER OF ALASKA:	
ANCHORAGE	278-3121
STATEWIDE	1-800-478-3121

(INCLUDES ADOT, ATU, AWWU, CEA, ENSTAR, GCI, MTA, MEA, ML&P, MOA TRAFFIC SIGNALS, MOA STORM/STREETS)

CAUTION

EXISTING UTILITY LOCATIONS ARE APPROXIMATE. CONTRACTOR SHALL VERIFY ALL UTILITY LOCATIONS PRIOR TO CONSTRUCTION.

engineers surveyors bell
801 W. FIREWEED LN. #201
ANCHORAGE, AK 99503
(907)274-5257

STATE OF ALASKA DEPARTMENT OF NATURAL RESOURCES

KASILOF SPECIAL USE AREA
NORTH SIDE IMPROVEMENTS
PROJECT No. 74032-1

EXISTING SITE PLAN

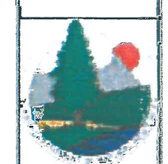

PREPARED: VFS
DRAWN: VFS
REVIEWED: BMW
DATE: 12/10/15

SHEET 5 OF 20 SHEETS

NOTE:

1. CONTOURS SHOWN ARE 2' MINOR AND 10' MAJOR

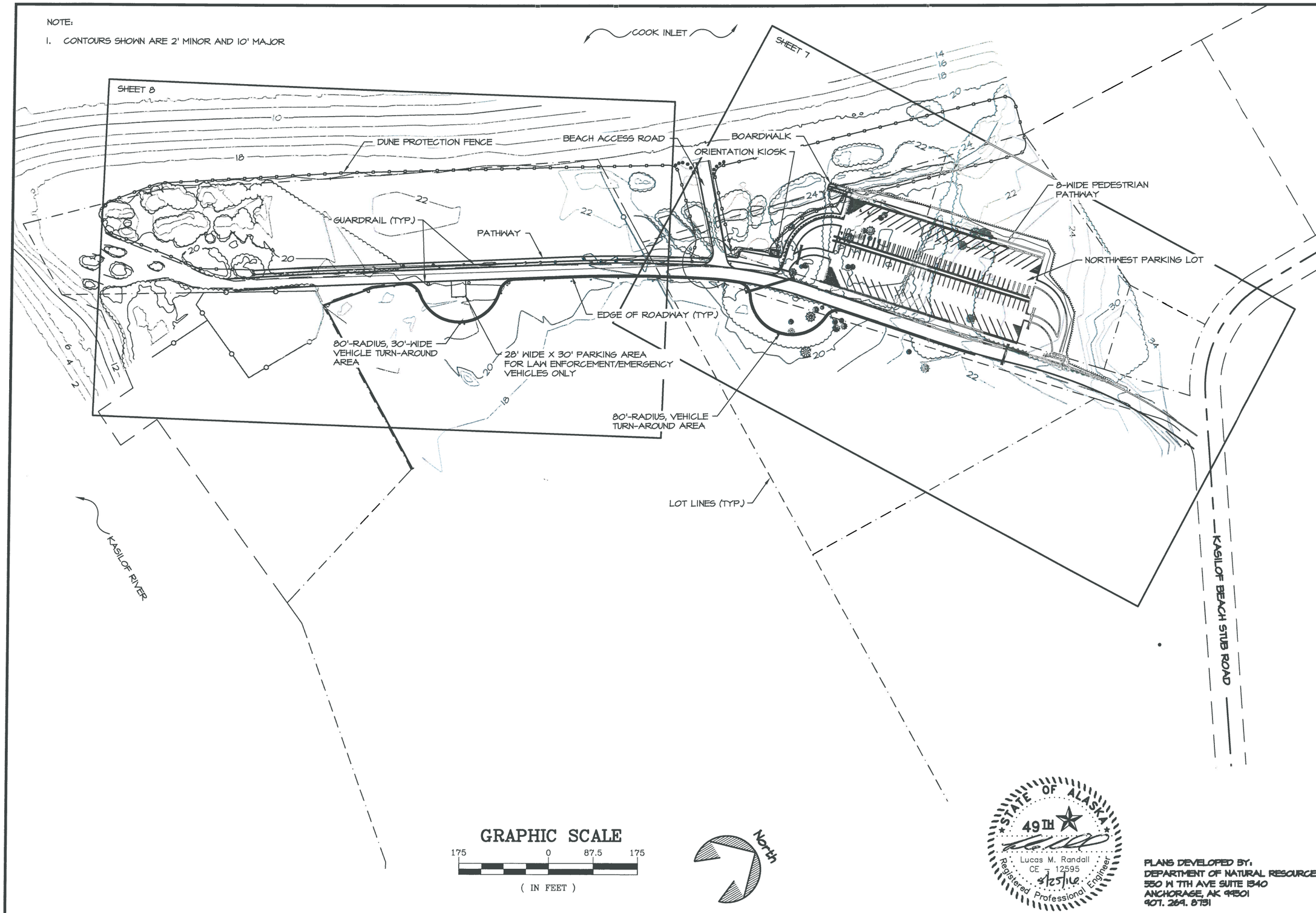

STATE OF ALASKA 49TH Lucas M. Randall CE - 12595 8/25/16 Registered Professional Engineer

PLANS DEVELOPED BY:
DEPARTMENT OF NATURAL RESOURCES
550 W 7TH AVE SUITE 1340
ANCHORAGE, AK 99501
907. 269. 8751

STATE OF ALASKA DEPARTMENT OF NATURAL RESOURCES

SITE OVERVIEW

KASILOF RIVER SUA
NORTH SITE IMPROVEMENTS
PROJECT No. 76059-1

PREPARED: LGN
DRAWN: LGN
REVIEWED: LMR
DATE: 08/16/2016

SHEET 6 OF 20 SHEETS

NOTES:

1. CONTOURS SHOWN ARE 1' MINOR AND 5' MAJOR.
2. START OF GUARDRAIL WILL BE VERIFIED BY THE ENGINEER. INTENT IS TO START GUARDRAIL WHERE SUFFICIENT VEGETATION WILL PROHIBIT MOTOR VEHICLES FROM TRAVELING AROUND THE GUARDRAIL.

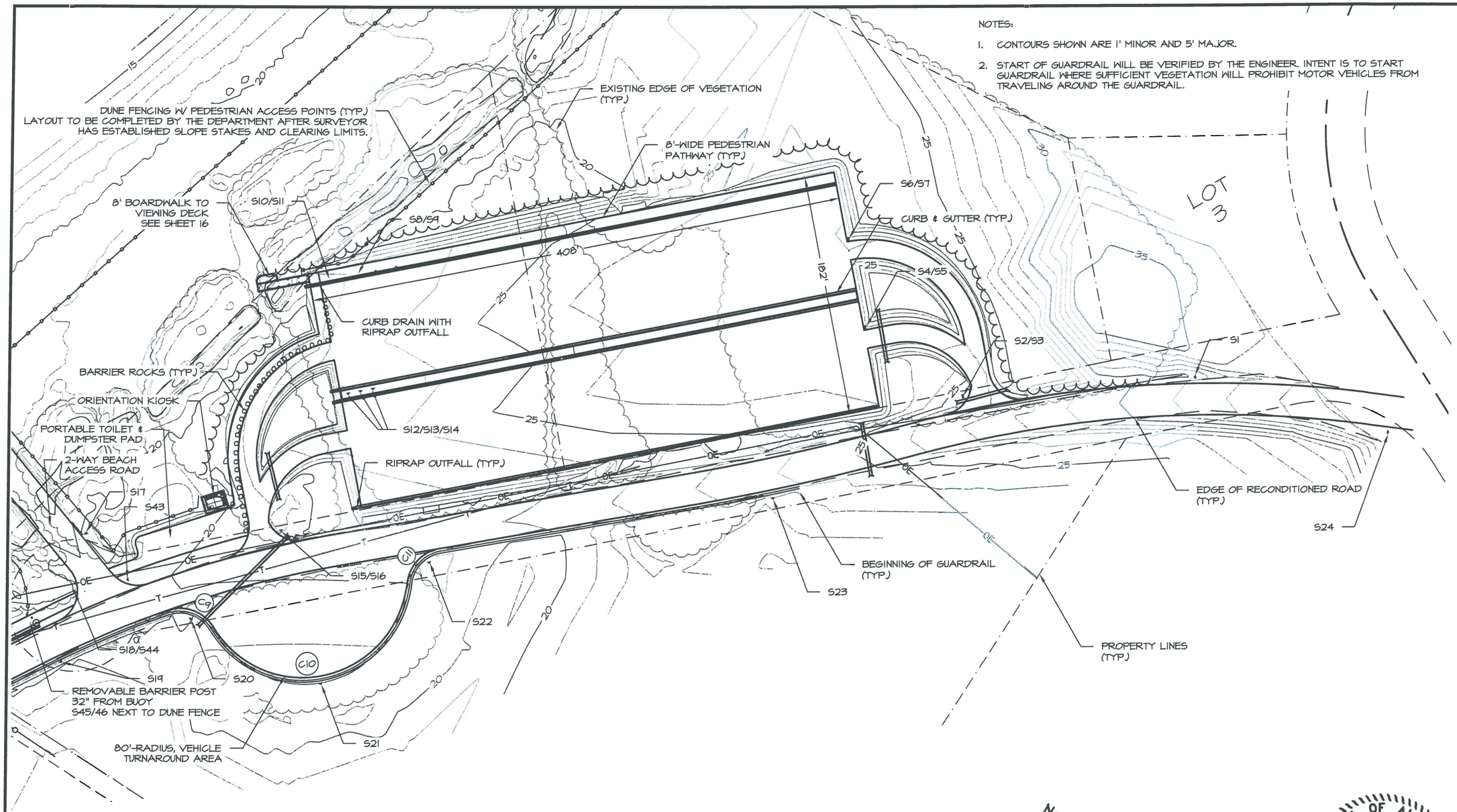

CURVE TABLE							
CURVE NO.	LENGTH	RADIUS	DELTA	CHORD DIRECTION	CHORD LENGTH	STARTING NORTHING	STARTING EASTING
C9	38.12	30.00	72.81	N81° 25' 08"E	35.61	2336637.14	1406009.26
C10	199.23	80.00	142.69	N46° 28' 37"E	151.54	2336642.45	1406044.47
C11	36.23	30.00	69.20	N9° 44' 00"E	34.07	2336746.85	1406154.39

North

GRAPHIC SCALE

75 0 37.5 75

(IN FEET)

STATE OF ALASKA
49TH
Lucas M. Randall
CE - 12595
8/25/16
Registered Professional Engineer

PLANS DEVELOPED BY:
DEPARTMENT OF NATURAL RESOURCES
550 W 7TH AVE SUITE 1340
ANCHORAGE, AK 99501
907. 269. 8731

STATE OF ALASKA DEPARTMENT OF NATURAL RESOURCES

KASILOF RIVER SUA
NORTH SITE IMPROVEMENTS
PROJECT No. 76058-1

PARKING AREA OVERVIEW

PREPARED: LGN
DRAWN: LGN
REVIEWED: LMR
DATE: 08/17/2016

SHEET 7 OF 20 SHEETS

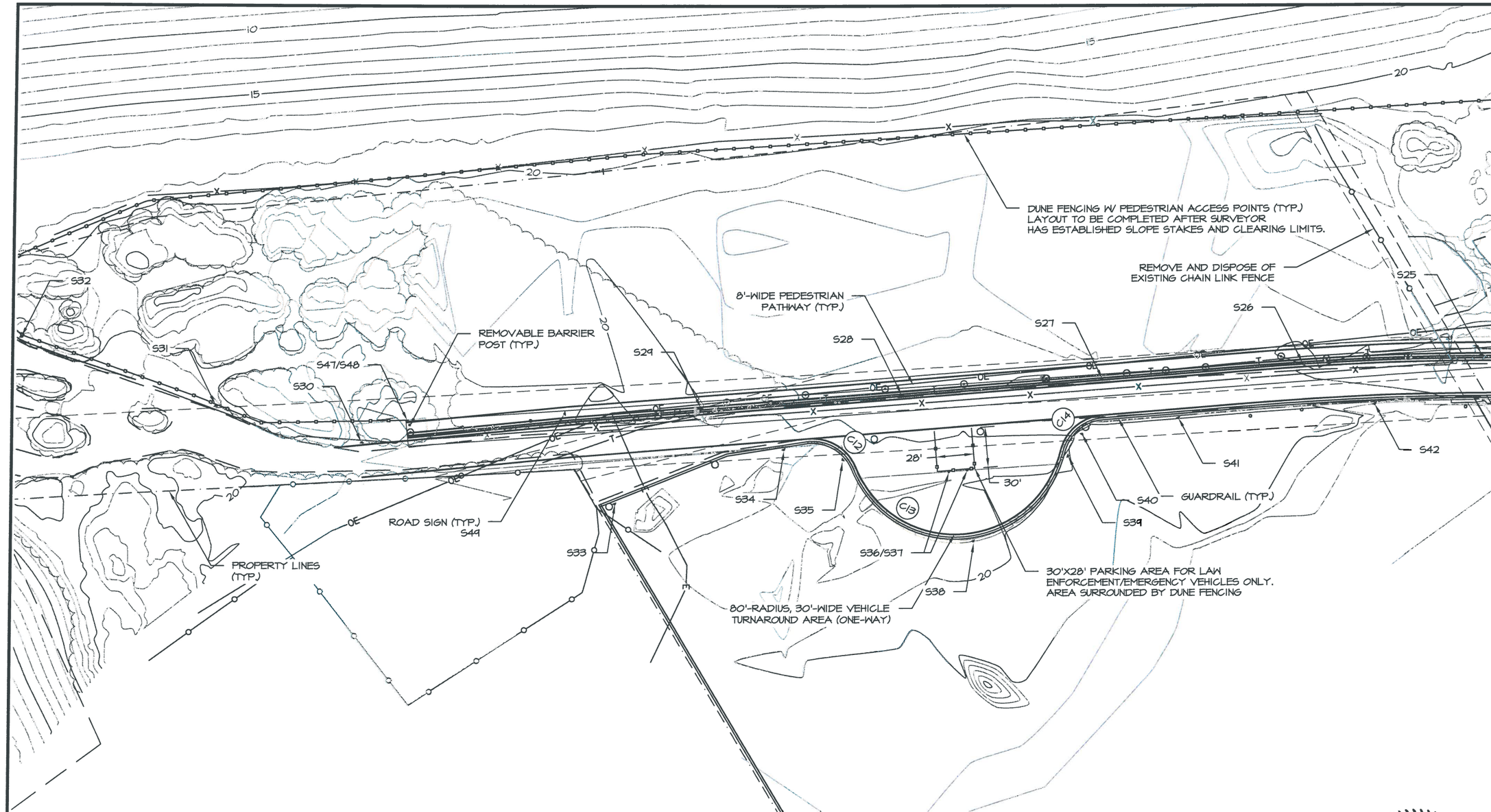

CURVE TABLE							
CURVE NO.	LENGTH	RADIUS	DELTA	CHORD DIRECTION	CHORD LENGTH	STARTING NORTHING	STARTING EASTING
C12	44.15	35.00	72.28	N64° 47' 38"E	41.29	2336069.06	1405671.61
C13	201.85	80.00	144.56	N28° 39' 12"E	152.41	2336086.64	1405708.96
C14	44.15	35.00	72.28	N7° 29' 14"W	41.28	2336220.39	1405782.04

GRAPHIC SCALE

75 0 37.5 75

(IN FEET)

North

STATE OF ALASKA
49TH
Lucas M. Randall
CE - 12595
8/25/16
Registered Professional Engineer

PLANS DEVELOPED BY:
DEPARTMENT OF NATURAL RESOURCES
550 W 7TH AVE SUITE 1340
ANCHORAGE, AK 99501
907. 269. 8791

STATE OF ALASKA DEPARTMENT OF NATURAL RESOURCES

KASILOF RIVER SUA
NORTH SITE IMPROVEMENTS
PROJECT No. 76058-1

TURNAROUND OVERVIEW

PREPARED: LGN
DRAWN: LGN
REVIEWED: LMR
DATE: 08/17/2016

SHEET 8 OF 20 SHEETS

HORIZONTAL LINE DATA

LINE #	START STATION	LENGTH	DIRECTION	START EASTING	START NORTHING	END EASTING	END NORTHING
L1	10+00	31.79'	S66° 41' 21.44"W	1,406,740.20	2,337,241.62	1,406,711.01	2,337,229.03
L2	13+78.73	12.56'	S44° 23' 10.29"W	1,406,426.76	2,337,033.95	1,406,417.98	2,337,024.98
L3	15+45.20	276.50'	S49° 34' 19.59"W	1,406,305.49	2,336,920.00	1,406,095.01	2,336,740.69
L4	20+51.08	50.06'	S33° 07' 09.05"W	1,405,944.00	2,336,569.09	1,405,916.65	2,336,527.16

HORIZONTAL CURVE DATA

CURVE #	PC STA	PT STA	RADIUS	LENGTH	DELTA	RADIUS EASTING	RADIUS NORTHING
C1	10+31.79	13+78.73	891.26'	346.93'	22°18'11.16"	1,407,063.69	2,336,410.53
C2	13+91.29	15+45.20	1700.51'	153.92'	5°11'09.30"	1,405,202.72	2,338,214.47
C3	18+21.71	20+51.08	798.76'	229.37'	16°27'10.54"	1,406,613.00	2,336,132.66

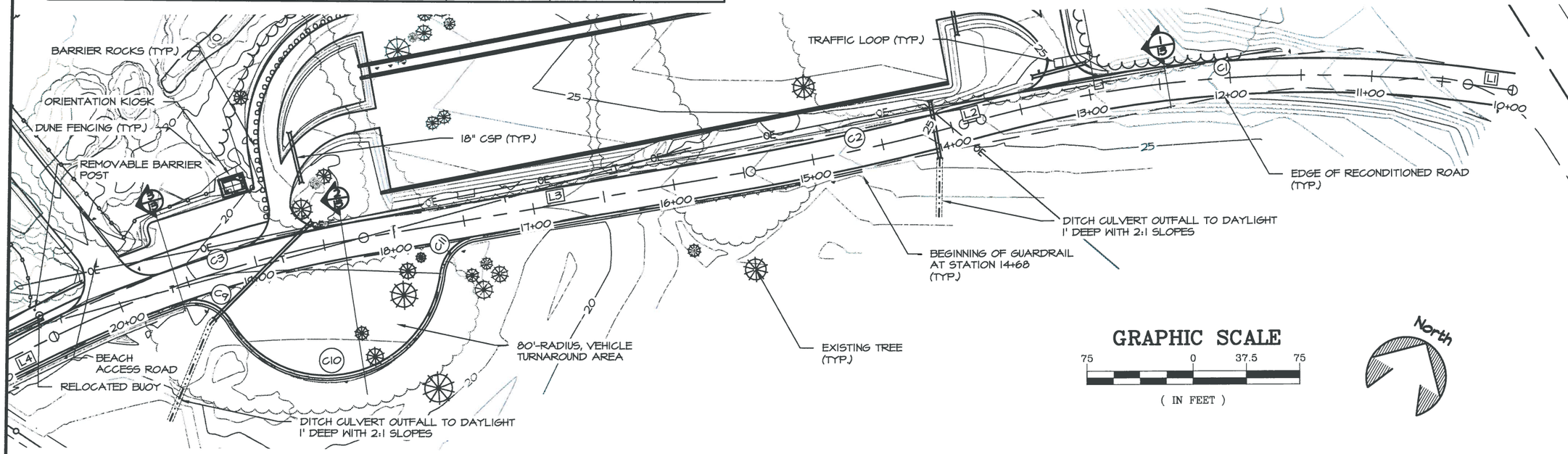

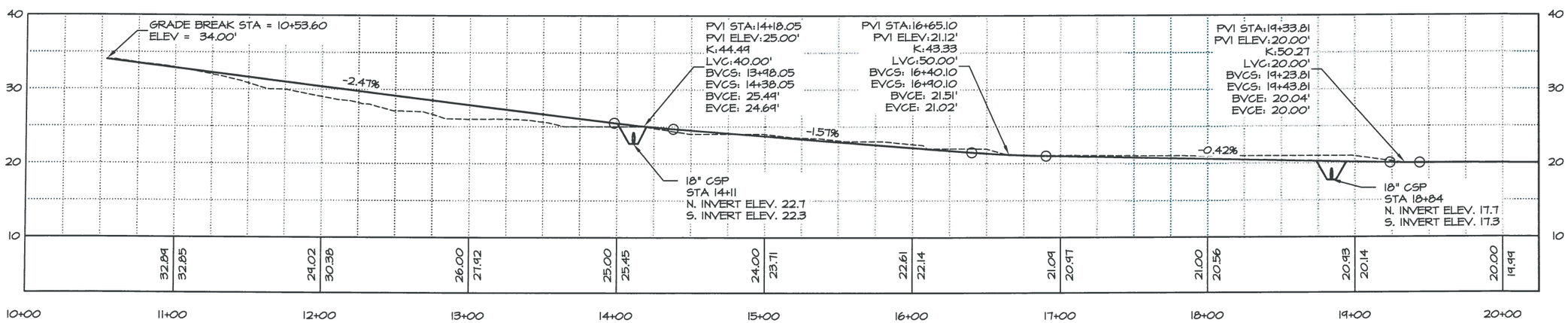

STATE OF ALASKA
49TH
Lucas M. Randall
CE - 12595
8/25/16
Registered Professional Engineer

PLANS DEVELOPED BY:
DEPARTMENT OF NATURAL RESOURCES
550 W 7TH AVE SUITE 1340
ANCHORAGE, AK 99501
907. 269. 8731

STATE OF ALASKA DEPARTMENT OF NATURAL RESOURCES

KASILOF RIVER SUA
NORTH SITE IMPROVEMENTS
PROJECT No. 76058-1

PLAN & PROFILE
STA 10+00 TO 20+00

PREPARED: LGN
DRAWN: LGN
REVIEWED: LMR
DATE: 08/24/2016

SHEET 9 OF 20 SHEETS

HORIZONTAL LINE DATA							
LINE #	START STATION	LENGTH	DIRECTION	START EASTING	START NORTHING	END EASTING	END NORTHING
L4	20+51.08	50.06'	S33° 07' 09.05"W	1,405,944.00	2,336,569.09	1,405,916.65	2,336,527.16
L5	22+90.43	506.92'	S28° 39' 12.21"W	1,405,819.51	2,336,364.76	1,405,576.44	2,335,919.92
L6	27+97.34	157.03'	S27° 29' 01.38"W	1,405,576.44	2,335,919.92	1,405,503.97	2,335,780.61

HORIZONTAL CURVE DATA							
CURVE #	PC STA	PT STA	RADIUS	LENGTH	DELTA	RADIUS EASTING	RADIUS NORTHING
C3	18+21.71	20+51.08	798.76'	229.37'	16°27'10.54"	1,406,613.00	2,336,132.66
C4	21+01.14	22+90.43	2428.50'	189.28'	4°27'56.84"	1,407,450.61	2,335,200.26

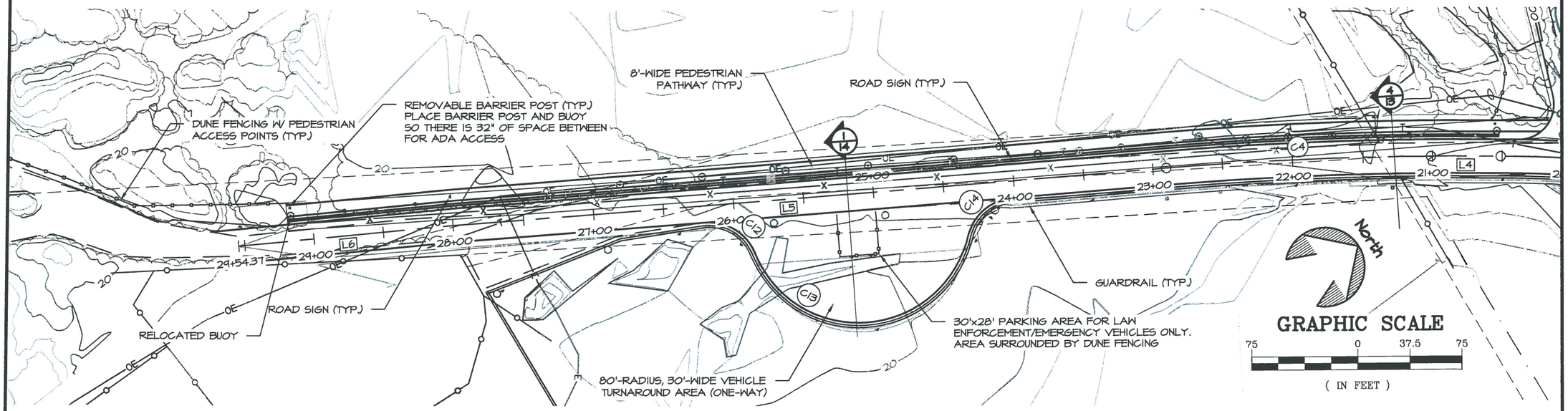

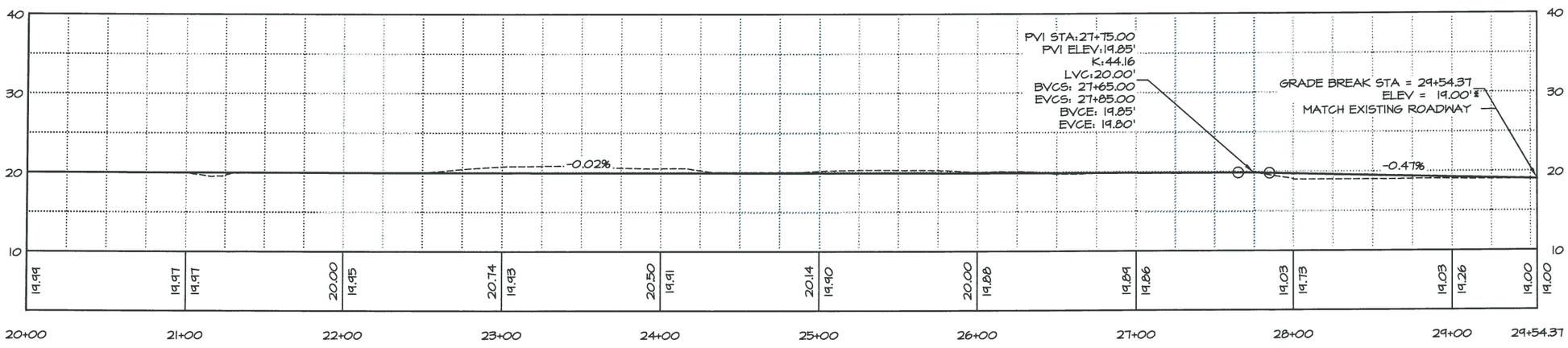

STATE OF ALASKA 49TH
Lucas M. Randall
CE - 12595
4/25/16
Registered Professional Engineer

PLANS DEVELOPED BY:
DEPARTMENT OF NATURAL RESOURCES
550 W 7TH AVE SUITE 1340
ANCHORAGE, AK 99501
907. 269. 8731

STATE OF ALASKA DEPARTMENT OF NATURAL RESOURCES

PLAN & PROFILE
STA. 20+00 TO 29+54.37

KASILOF RIVER SUA
NORTH SITE IMPROVEMENTS
PROJECT No. 76058-1

PREPARED: LGN
DRAWN: LGN
REVIEWED: LMR
DATE: 08/16/2016

SHEET 10 OF 20 SHEETS

HORIZONTAL LINE DATA

LINE #	START STATION	LENGTH	DIRECTION	START EASTING	START NORTHING	END EASTING	END NORTHING
L7	50+00	67.80'	N41° 34' 56.86"W	1,406,471.76	2,337,076.83	1,406,426.76	2,337,127.54
L8	51+93.45	400.01'	S48° 25' 32.77"W	1,406,313.83	2,337,134.30	1,406,014.59	2,336,868.85
L9	57+19.12	57.39'	S41° 34' 20.38"E	1,406,007.83	2,336,755.92	1,406,045.91	2,336,712.99
L10	70+00	9.04'	N41° 34' 34.08"W	1,406,464.85	2,337,084.61	1,406,458.85	2,337,091.37
L11	71+23.28	400.02'	S48° 25' 32.77"W	1,406,359.20	2,337,083.17	1,406,059.94	2,336,817.72
L12	76+37.54	9.04'	S41° 34' 20.38"E	1,406,039.91	2,336,719.75	1,406,045.91	2,336,712.99

HORIZONTAL CURVE DATA

CURVE #	PC STA	PT STA	RADIUS	LENGTH	DELTA	RADIUS EASTING	RADIUS NORTHING
C5	50+67.80	51+93.45	80.00'	125.65'	89°59'30.36"	1,406,366.92	2,337,074.45
C6	55+93.46	57+19.12	80.00'	125.66'	89°59'53.15"	1,406,067.68	2,336,809.01
C7	70+09.04	71+03.30	60.00'	94.26'	90°00'27.00"	1,406,413.97	2,337,051.55
C8	75+43.29	76+37.54	60.00'	94.26'	90°00'27.00"	1,406,084.79	2,336,759.57

CURVE TABLE

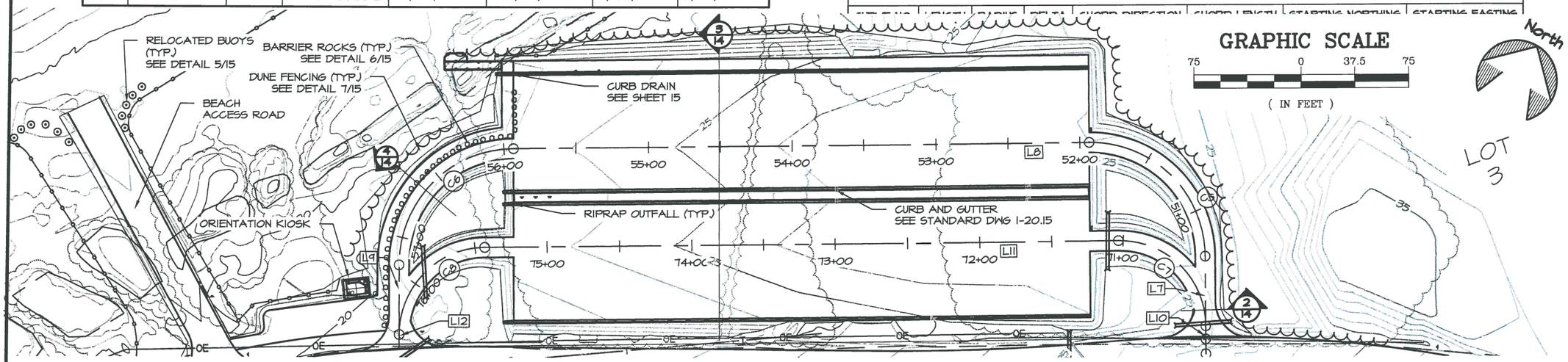

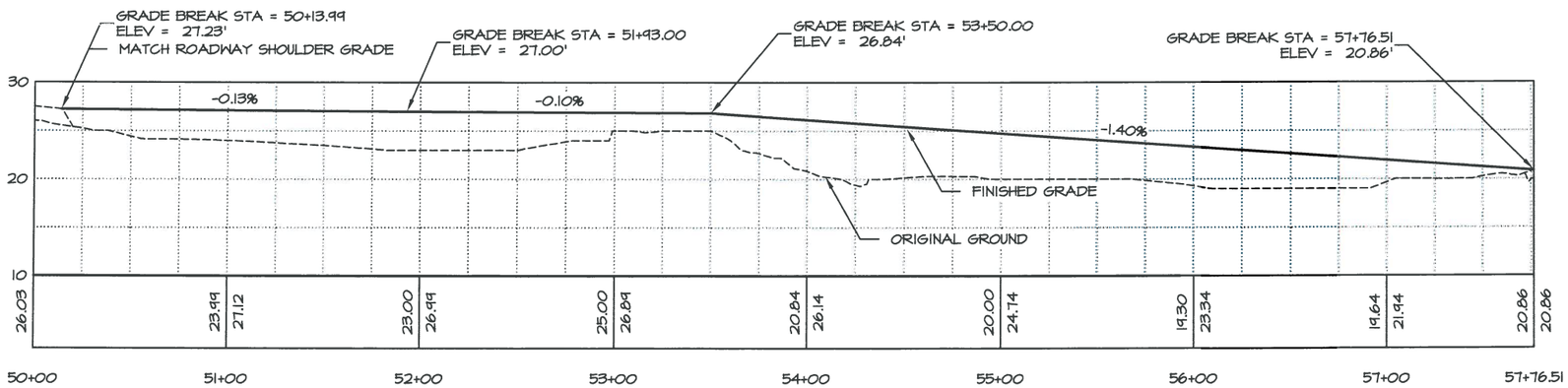

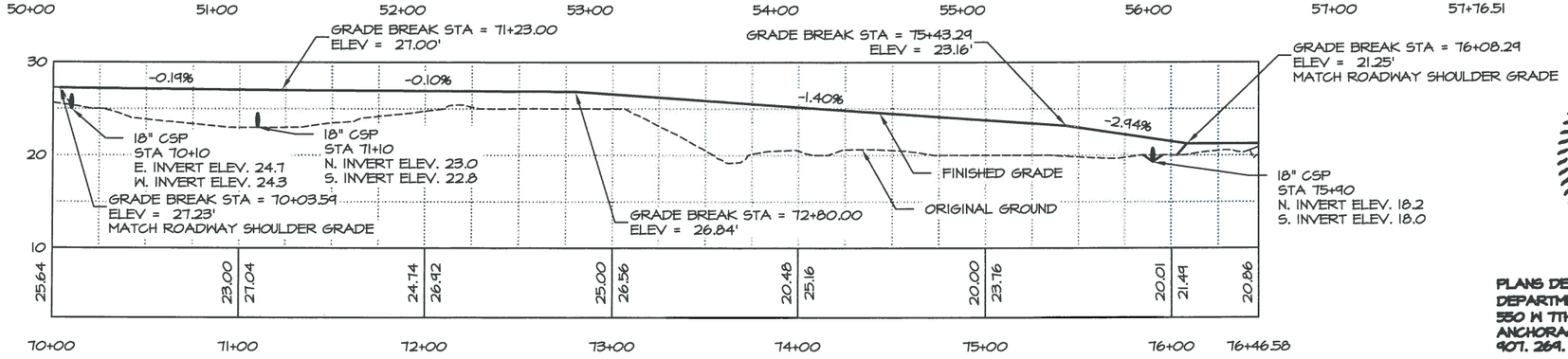

STATE OF ALASKA
49TH
Lucas M. Randall
CE - 12595
8/25/16
Registered Professional Engineer

PLANS DEVELOPED BY:
DEPARTMENT OF NATURAL RESOURCES
550 W 7TH AVE SUITE 1340
ANCHORAGE, AK 99501
907. 269. 8731

STATE OF ALASKA DEPARTMENT OF NATURAL RESOURCES

KASILOF RIVER SUA
NORTH SITE IMPROVEMENTS
PROJECT No. 76058-1

PLAN & PROFILE
PARKING AREA

PREPARED: LGN
DRAWN: LGN
REVIEWED: LMR
DATE: 08/16/2016

SHEET
1
OF 20 SHEETS

HORIZONTAL LINE DATA							
LINE #	START STATION	LENGTH	DIRECTION	START EASTING	START NORTHING	END EASTING	END NORTHING
L13	0+00	210.20'	N70° 14' 09.62"W	1,405,967.20	2,336,622.85	1,405,769.38	2,336,693.93

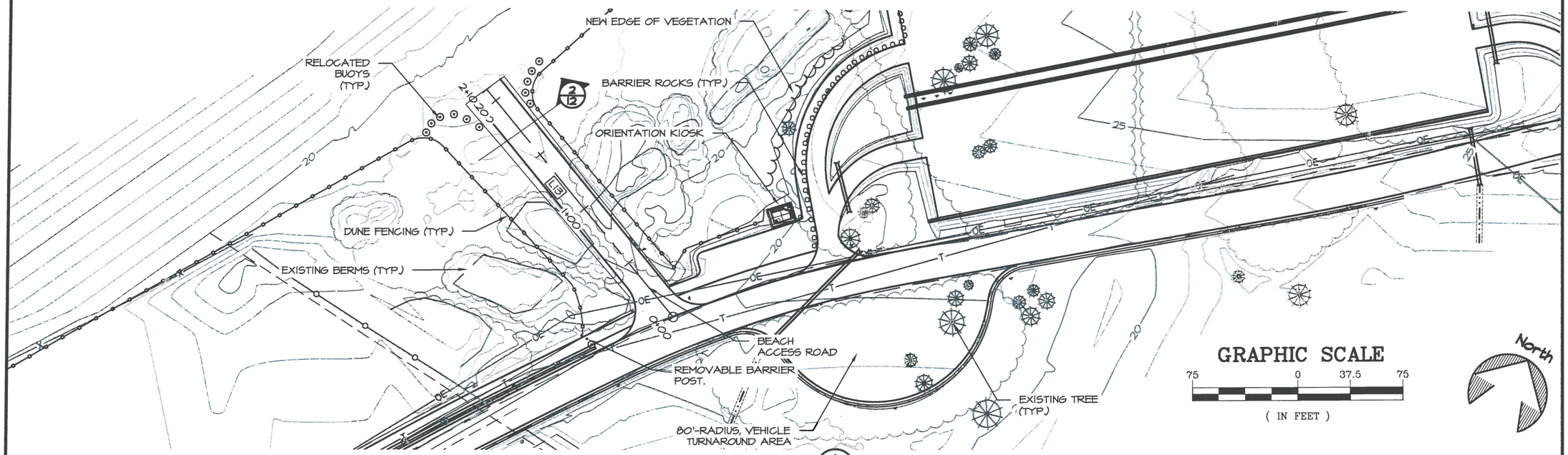

1/12 BEACH ACCESS ROAD
PLAN VIEW

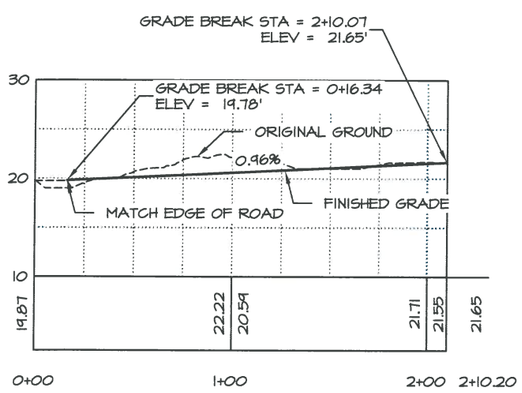

2/12 BEACH ACCESS ROAD
PROFILE VIEW

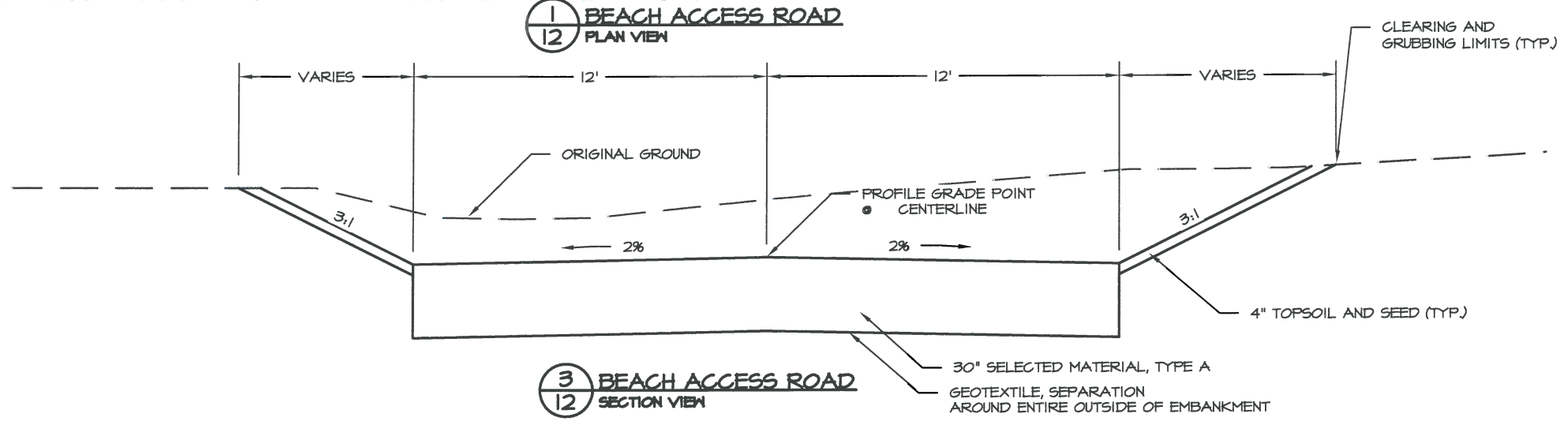

3/12 BEACH ACCESS ROAD
SECTION VIEW

STATE OF ALASKA
49TH
Lucas M. Randall
CE - 12595
8/25/16
Registered Professional Engineer

PLANS DEVELOPED BY:
DEPARTMENT OF NATURAL RESOURCES
550 W 7TH AVE SUITE 1340
ANCHORAGE, AK 99501
907. 269. 8791

STATE OF ALASKA DEPARTMENT OF NATURAL RESOURCES

BEACH ACCESS ROAD

KASILOF RIVER SUA
NORTH SITE IMPROVEMENTS
PROJECT No. 76058-1

PREPARED: LGN
DRAWN: LGN
REVIEWED: LMR
DATE: 08/16/2016

SHEET 12 OF 20 SHEETS

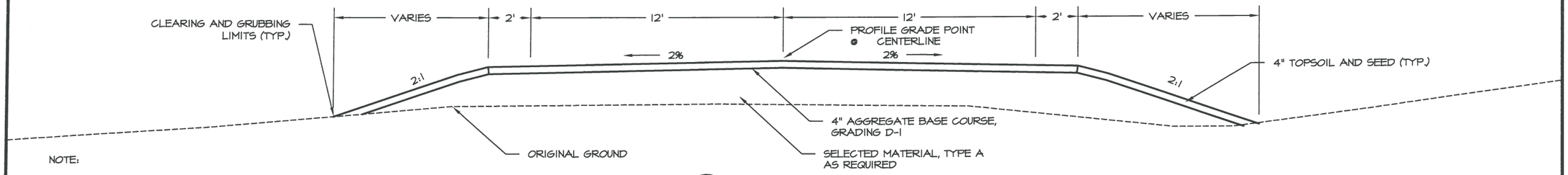

NOTE:

1. GUARDRAIL SHALL BE INSTALLED PER STD. DWGS G-04.10S AND G-10.01 UNLESS OTHERWISE MARKED BY THE ENGINEER.

1/13 MAIN ROAD
SECTION VIEW STA 10+00 TO 17+50

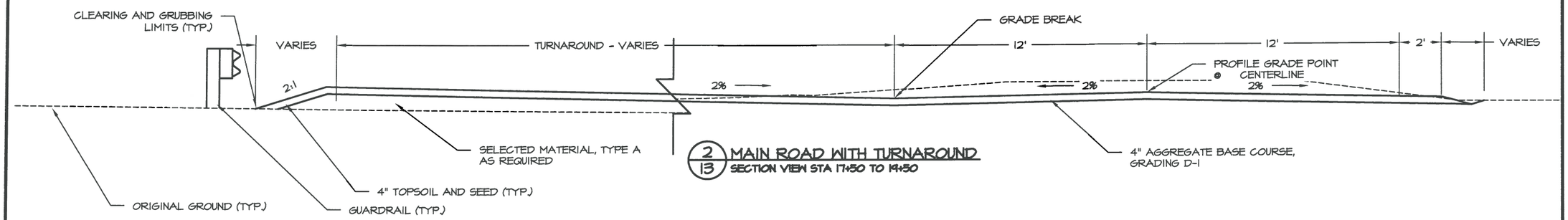

2/13 MAIN ROAD WITH TURNAROUND
SECTION VIEW STA 17+50 TO 19+50

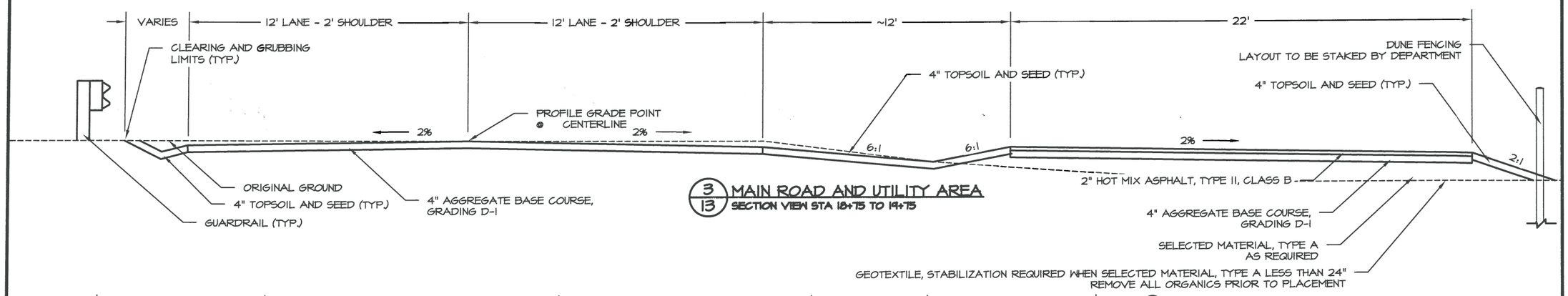

3/13 MAIN ROAD AND UTILITY AREA
SECTION VIEW STA 18+75 TO 19+75

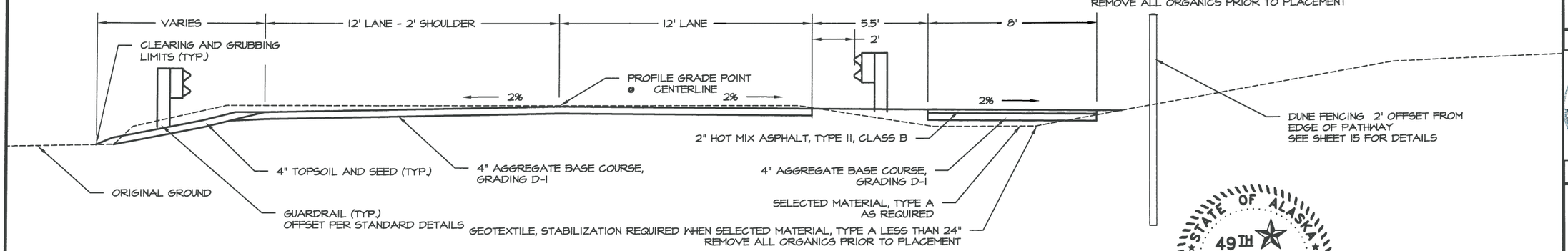

4/13 MAIN ROAD WITH PEDESTRIAN PATHWAY
SECTION VIEW STA 20+50 TO 24+25

STATE OF ALASKA
49TH
Lucas M. Randall
CE - 12595
8/25/16
Registered Professional Engineer

PLANS DEVELOPED BY:
DEPARTMENT OF NATURAL RESOURCES
550 W 7TH AVE SUITE 1340
ANCHORAGE, AK 99501
907. 269. 8791

STATE OF ALASKA DEPARTMENT OF NATURAL RESOURCES

TYPICAL SECTIONS

KASILOF RIVER SUA
NORTH SITE IMPROVEMENTS
PROJECT No. 76058-1

PREPARED: LGN
DRAWN: LGN
REVIEWED: LMR
DATE: 08/16/2016

SHEET 13 OF 20 SHEETS

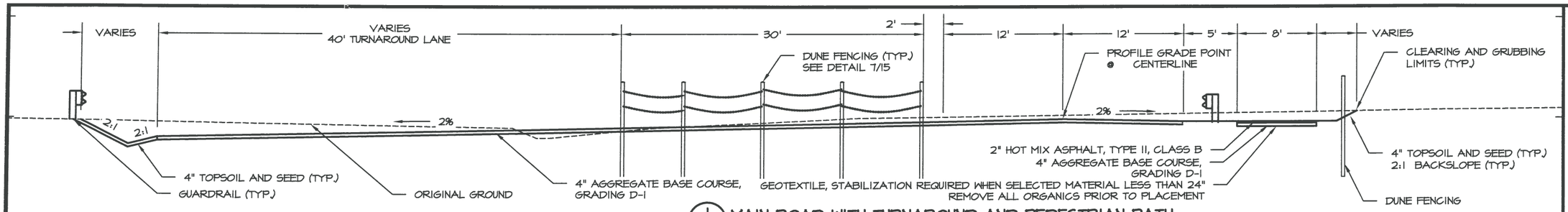

1/14 MAIN ROAD WITH TURNAROUND AND PEDESTRIAN PATH
SECTION VIEW STA 24+20 TO 26+00

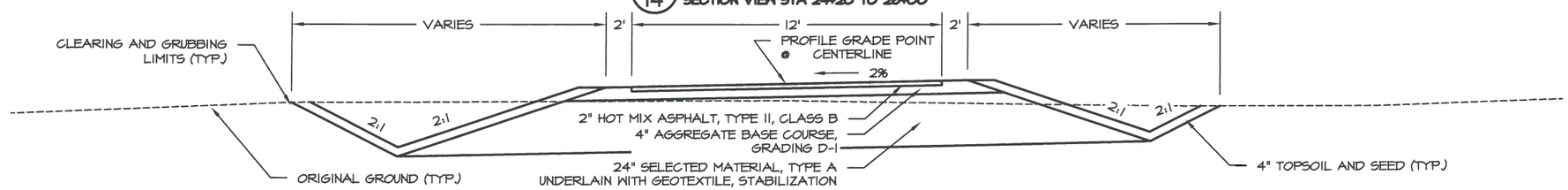

2/14 ONE WAY ENTRANCE ROAD
SECTION VIEW STA 50+25

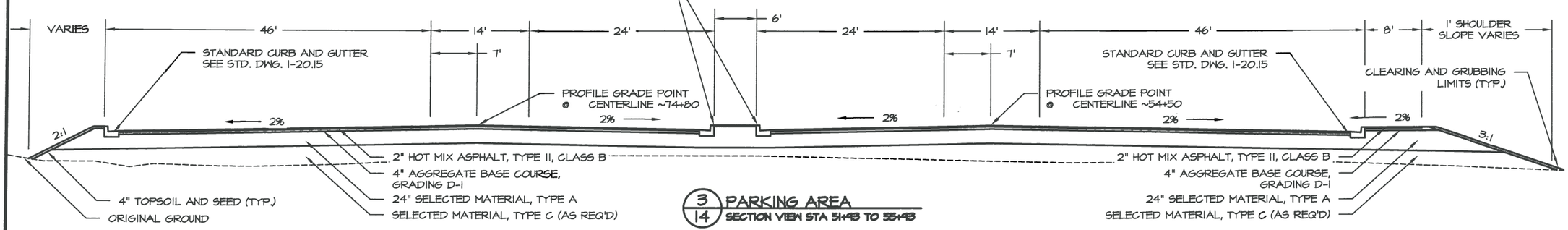

3/14 PARKING AREA
SECTION VIEW STA 51+43 TO 55+43

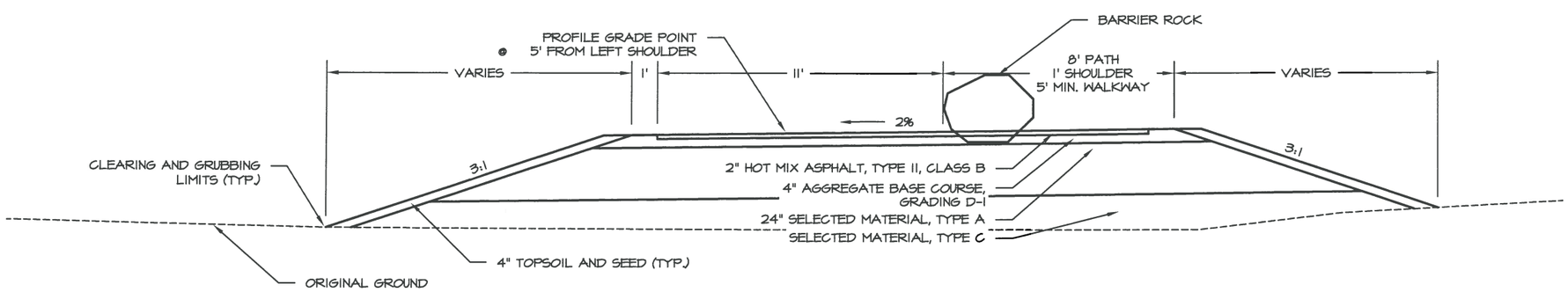

4/14 ONE WAY ROAD WITH PEDESTRIAN PATHWAY
SECTION VIEW STA 55+90 TO ~57+60

NOTE:

1. GUARDRAIL SHALL BE INSTALLED PER STD. DWGS G-04.10S AND G-10.01 UNLESS OTHERWISE MARKED BY THE ENGINEER.

STATE OF ALASKA
49TH
Lucas M. Randall
CE - 12595
8/25/16
Registered Professional Engineer

PLANS DEVELOPED BY:
DEPARTMENT OF NATURAL RESOURCES
550 W 7TH AVE SUITE 1340
ANCHORAGE, AK 99501
907. 269. 8791

STATE OF ALASKA DEPARTMENT OF NATURAL RESOURCES

KASILOF RIVER SUA
NORTH SITE IMPROVEMENTS
PROJECT No. 76058-1

TYPICAL SECTIONS 2

PREPARED: LGN
DRAWN: LGN
REVIEWED: LMR
DATE: 08/16/2016

SHEET 14 OF 20 SHEETS

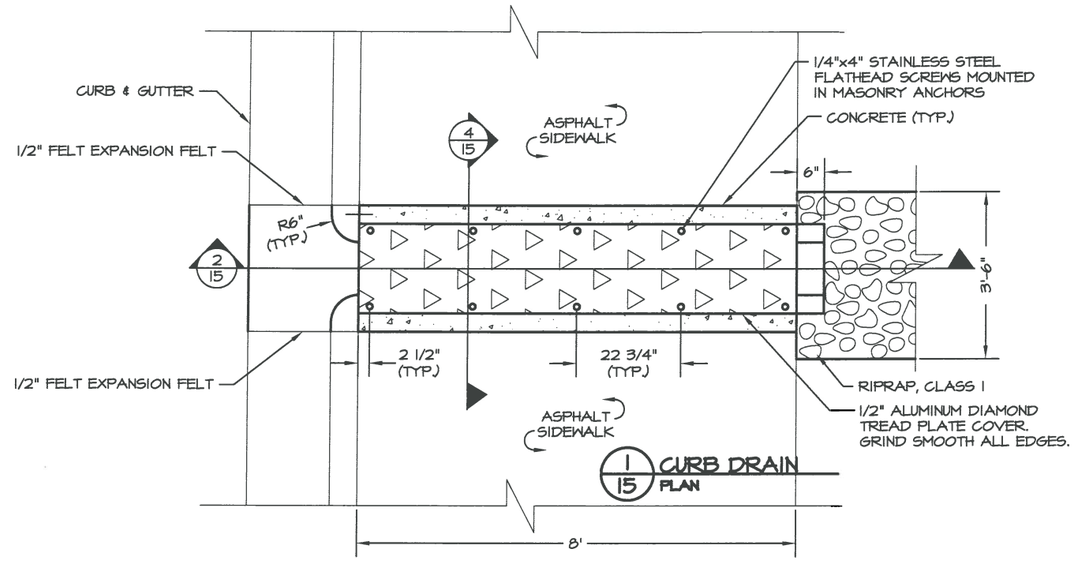

1/15 CURB DRAIN PLAN

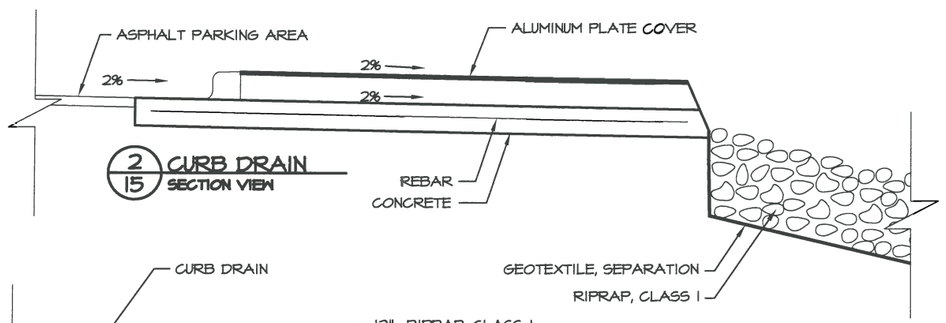

2/15 CURB DRAIN SECTION VIEW

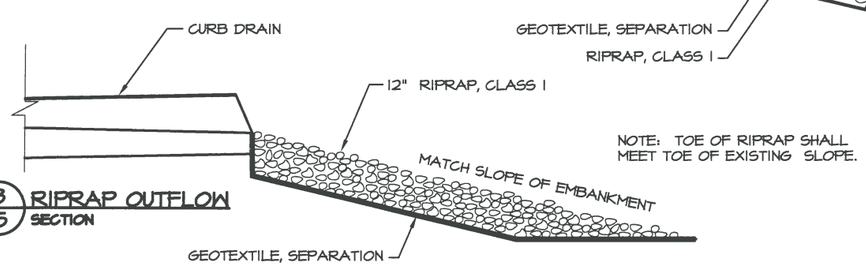

NOTE: TOE OF RIPRAP SHALL MEET TOE OF EXISTING SLOPE.

3/15 RIPRAP OUTFLOW SECTION

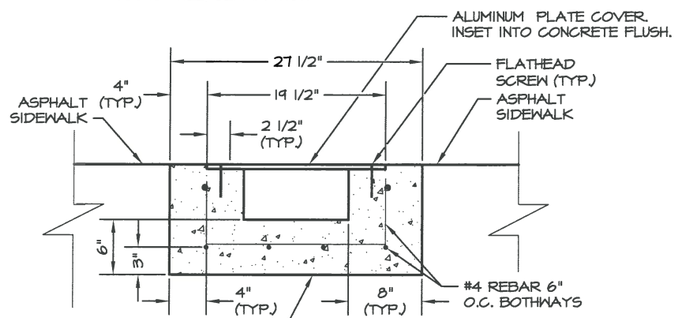

4/15 CURB DRAIN CROSS SECTION

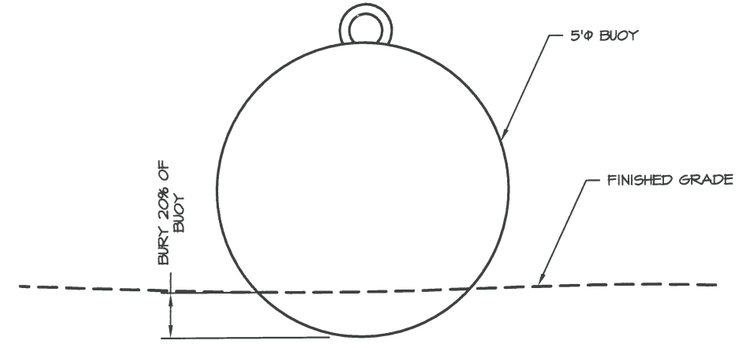

5/15 EXISTING BUOY DETAILS

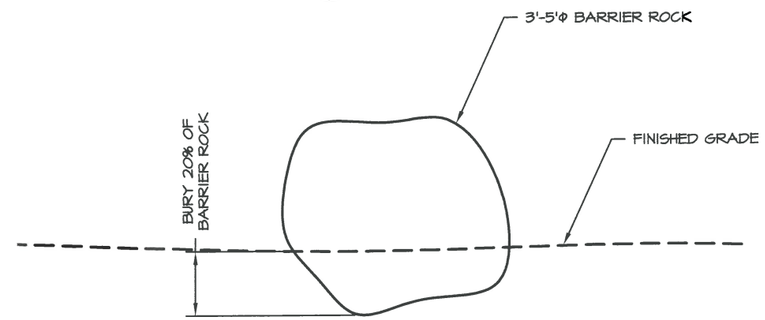

6/15 BARRIER ROCK DETAILS

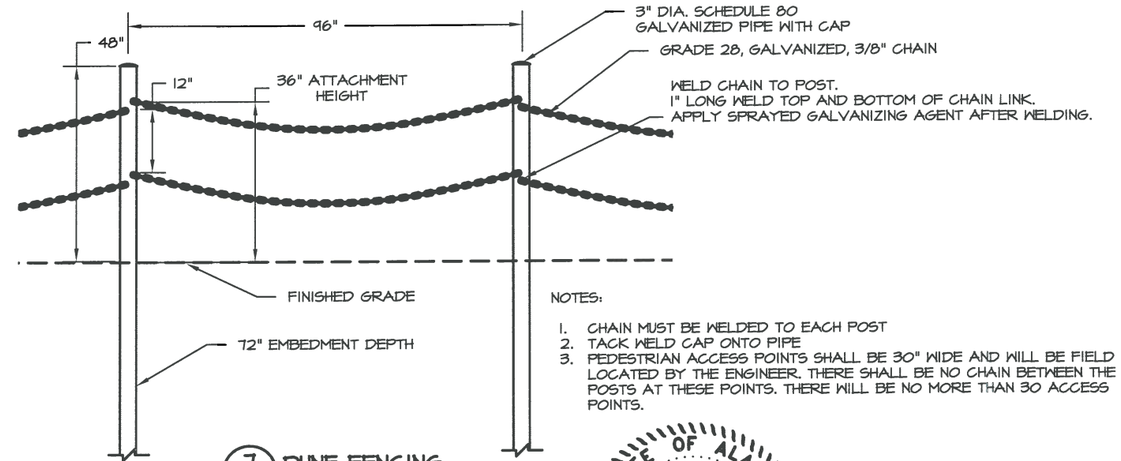

7/15 DUNE FENCING DETAILS

NOTES:

1. CHAIN MUST BE WELDED TO EACH POST
2. TACK WELD CAP ONTO PIPE
3. PEDESTRIAN ACCESS POINTS SHALL BE 30" WIDE AND WILL BE FIELD LOCATED BY THE ENGINEER. THERE SHALL BE NO CHAIN BETWEEN THE POSTS AT THESE POINTS. THERE WILL BE NO MORE THAN 30 ACCESS POINTS.

STATE OF ALASKA 49TH
Lucas M. Randall
CE - 12595
8/25/16
Registered Professional Engineer

PLANS DEVELOPED BY:
DEPARTMENT OF NATURAL RESOURCES
550 W 7TH AVE SUITE 1340
ANCHORAGE, AK 99501
907. 269. 8731

STATE OF ALASKA DEPARTMENT OF NATURAL RESOURCES

DETAILS

KASILOF SUA
NORTH SITE IMPROVEMENTS
PROJECT No. 76058-1

PREPARED: LGN
DRAWN: LGN
REVIEWED: LMR
DATE: 08/16/2016

SHEET 15 OF 20 SHEETS

BASIS OF BEARING			
POINT #	NORTHING	EASTING	ELEVATION
P1	2,336,903.51	1,405,962.48	23.61
P2	2,336,899.51	1,405,966.02	23.61
P3	2,336,898.20	1,405,956.49	24.25
P4	2,336,894.21	1,405,960.04	24.25
P5	2,336,892.79	1,405,950.15	24.89
P6	2,336,888.67	1,405,953.80	24.89
P7	2,336,885.63	1,405,944.55	24.89
P8	2,336,887.70	1,405,944.41	24.89
P9	2,336,883.59	1,405,948.07	24.89
P10	2,336,888.51	1,405,936.52	24.89
P11	2,336,882.61	1,405,938.67	24.89
P12	2,336,878.49	1,405,942.32	24.89

*ELEVATIONS AT P1 & P2 ARE BASED ON AN ASPHALT ELEVATION OF 22.97. IF ELEVATION OF ASPHALT DIFFERS IN FIELD, MATCH GRADES SHOWN FROM ELEVATION.

NOTES:

1. ELEVATIONS IN TABLE ARE FINISH FLOOR ELEVATIONS OF ELP WALKWAY DECKING SURFACE.
2. HELICAL PILES MUST HAVE AN 4,000 LB MINIMUM BEARING CAPACITY.
3. PILE DRIVING PLAN MUST BE APPROVED BY THE ENGINEER.
4. ALL WELDING MUST CONFORM TO THE REQUIREMENTS OF THE AWS STRUCTURAL WELDING CODE, AWS D1.1 PUBLISHED BY THE AMERICAN WELDING SOCIETY.
5. PILES SHALL BE GALVANIZED.

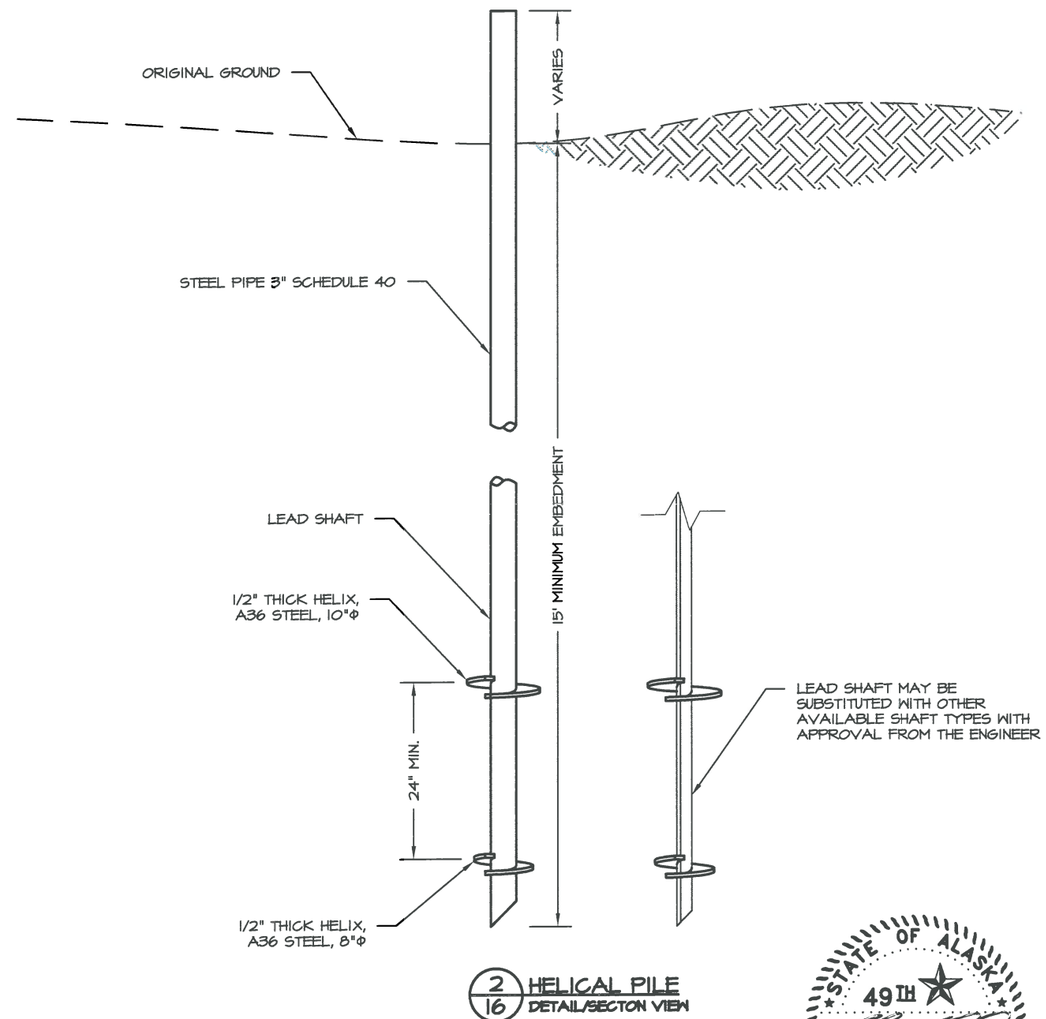

2/16 HELICAL PILE DETAIL/SECTON VIEW

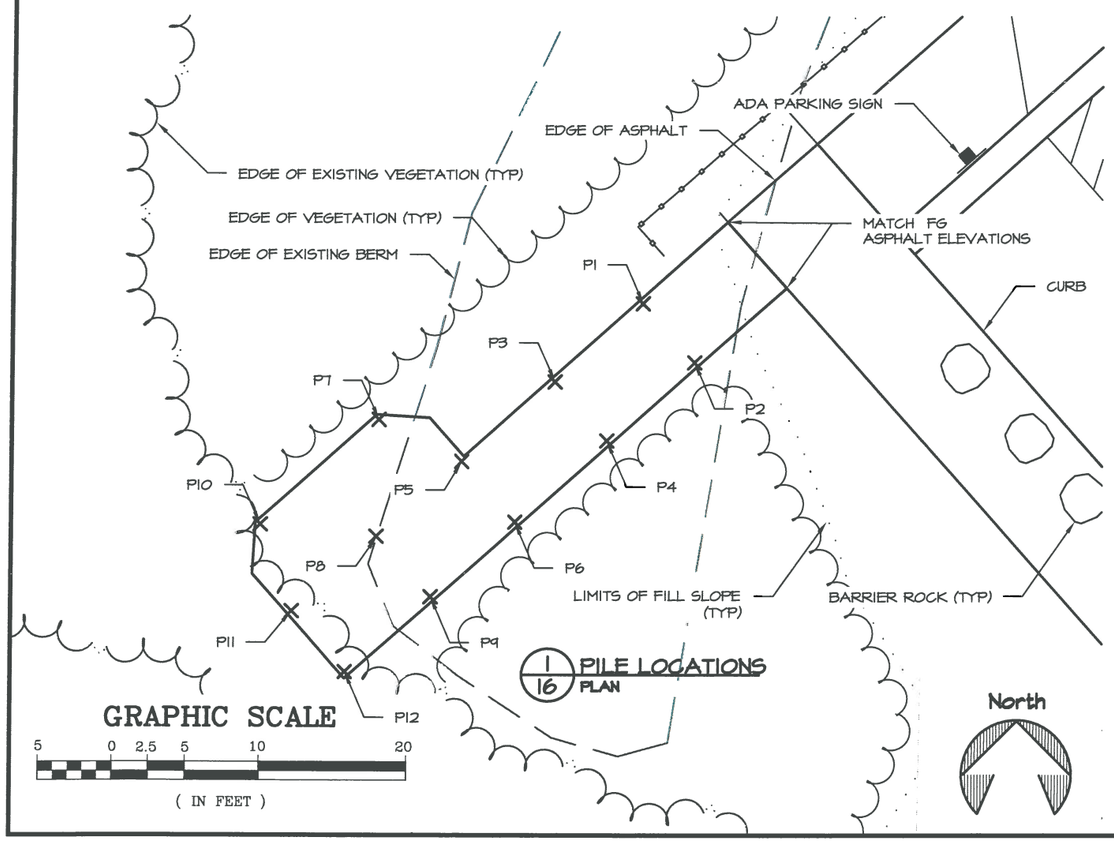

1/16 PILE LOCATIONS PLAN

STATE OF ALASKA 49TH
Lucas M. Randall
CE - 12595
8/25/16
Registered Professional Engineer

PLANS DEVELOPED BY:
DEPARTMENT OF NATURAL RESOURCES
550 W 7TH AVE SUITE 1340
ANCHORAGE, AK 99501
907. 269. 8731

STATE OF ALASKA DEPARTMENT OF NATURAL RESOURCES

KASILOF RIVER SUA
NORTH SITE IMPROVEMENTS
PROJECT No. 76058-1

ELP WALKWAY PILE LOCATIONS AND HELICAL PILE DETAIL

PREPARED: RDR
DRAWN: RDR
REVIEWED: LMR
DATE: 8/2/2016

SHEET 16 OF 20 SHEETS

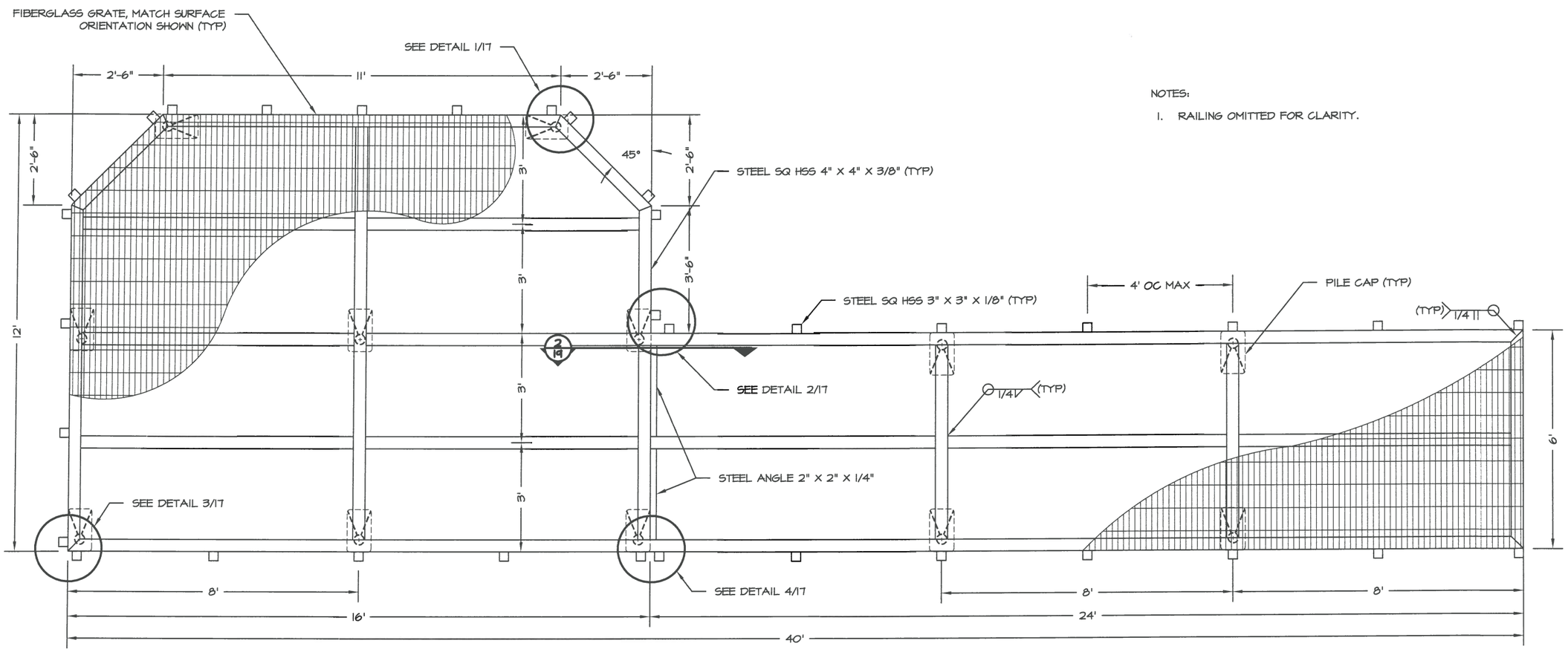

NOTES:

1. RAILING OMITTED FOR CLARITY.

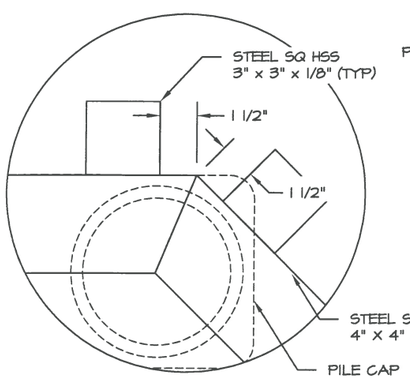

1/17 RAIL POST SPACING
TYPICAL DETAIL

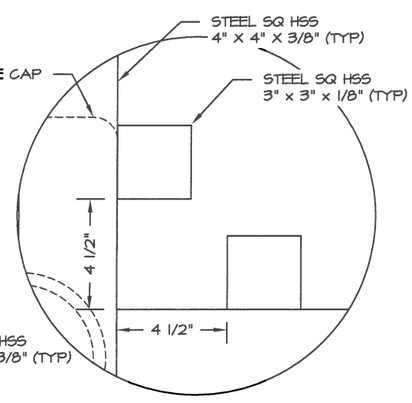

2/17 RAIL POST SPACING
TYPICAL DETAIL

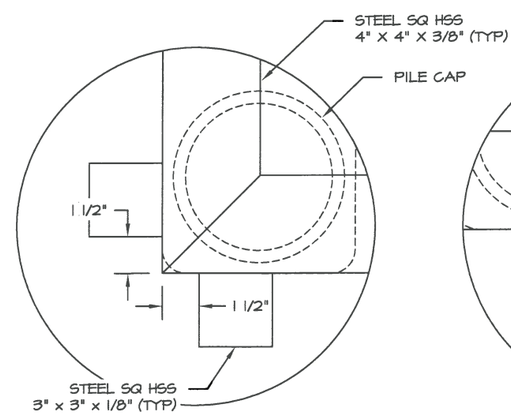

3/17 RAIL POST SPACING
TYPICAL DETAIL

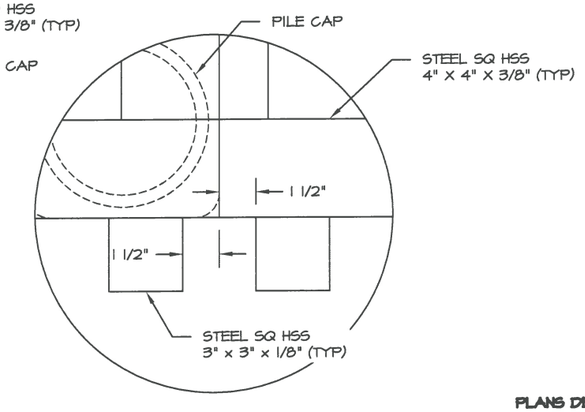

4/17 RAIL POST SPACING
TYPICAL DETAIL

STATE OF ALASKA
49TH
Lucas M. Randall
CE 12595
8/25/16
Registered Professional Engineer

PLANS DEVELOPED BY:
DEPARTMENT OF NATURAL RESOURCES
550 W 7TH AVE SUITE 1340
ANCHORAGE, AK 99501
907. 269. 8731

STATE OF ALASKA DEPARTMENT OF NATURAL RESOURCES

KASILOF RIVER SUA
NORTH SITE IMPROVEMENTS
PROJECT No. 76058-1

ELP WALKWAY FRAMING PLAN

PREPARED: RDR
DRAWN: RDR
REVIEWED: LMR
DATE: 8/2/2016

SHEET 17 OF 20 SHEETS

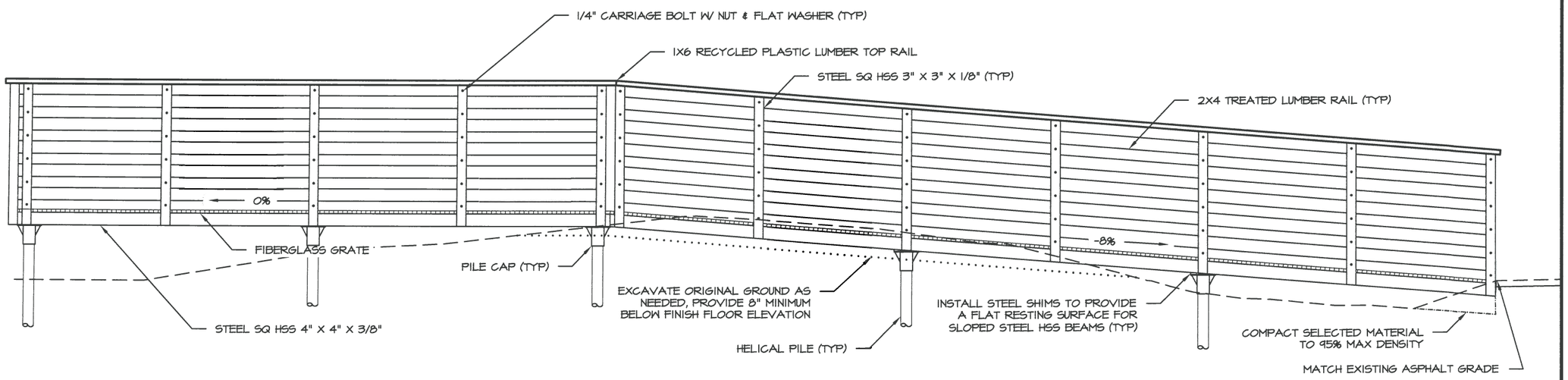

1/18 ELP WALKWAY
NORTHWEST ELEVATION

NOTES:

1. RECYCLED PLASTIC LUMBER TOP RAIL SHALL BE TREX ENHANCE SADDLE COMPOSITE DECK BOARD 1X6 (.94"X5.5" ACTUAL) OR APPROVED EQUAL.
2. LUMBER MANUFACTURE STAMPS SHALL BE INSTALLED FACING BOARDWALK EXTERIOR.

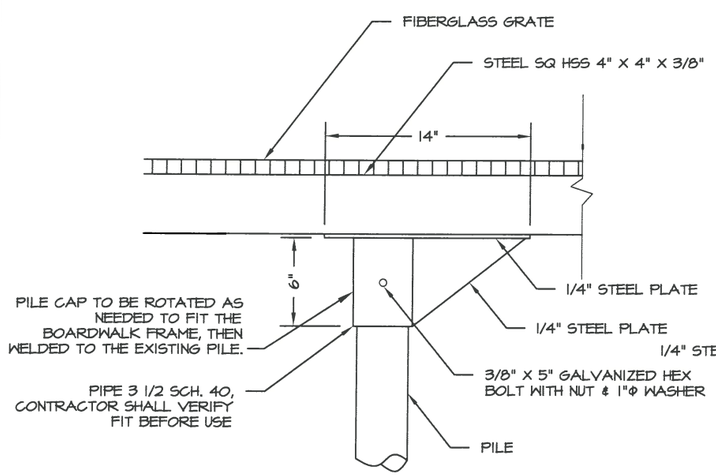

2/18 PILE CAP TYPICAL
DETAIL

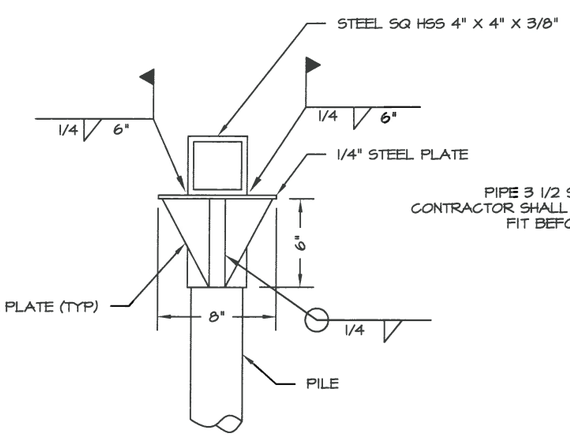

3/18 PILE CAP TYPICAL
DETAIL

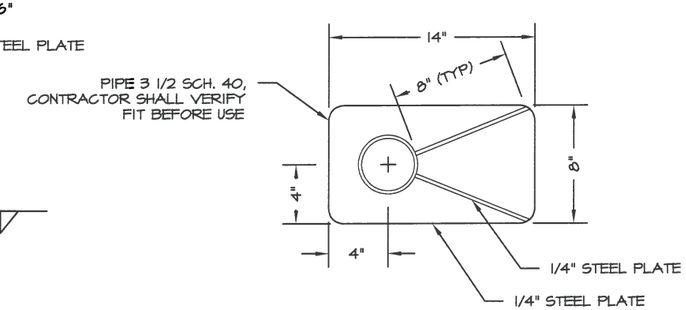

4/18 PILE CAP TYPICAL
DETAIL

STATE OF ALASKA 49TH
Lucas M. Randall
CE 12595
8/25/16
Registered Professional Engineer

PLANS DEVELOPED BY:
DEPARTMENT OF NATURAL RESOURCES
550 W 7TH AVE SUITE 1340
ANCHORAGE, AK 99501
907. 269. 8791

STATE OF ALASKA DEPARTMENT OF NATURAL RESOURCES

KASILOF RIVER SUA
NORTH SITE IMPROVEMENTS
PROJECT No. 76058-1

ELP WALKWAY ELEVATION

PREPARED: RDR
DRAWN: RDR
REVIEWED: LMR
DATE: 8/4/2016

SHEET 18 OF 20 SHEETS

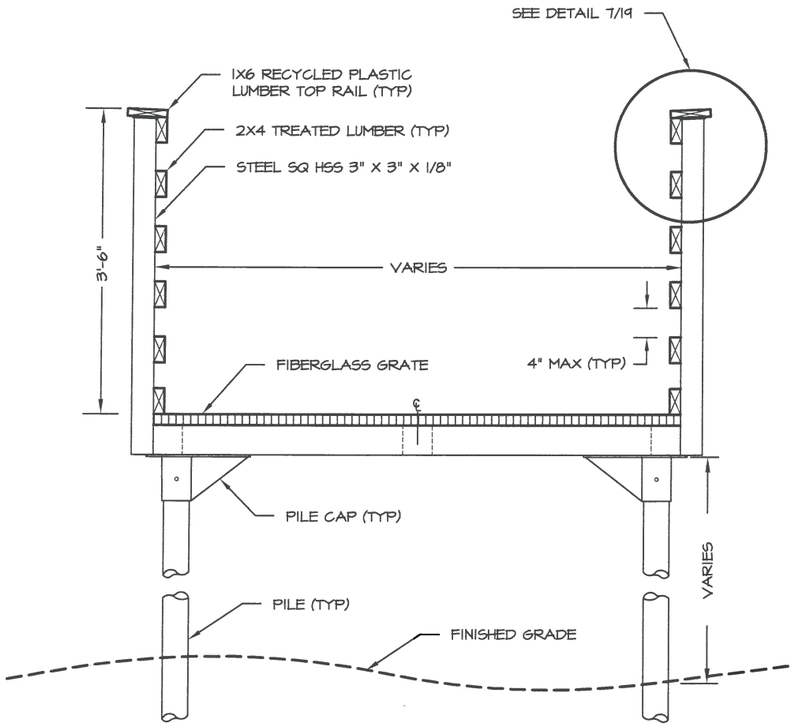

1/19 ELP WALKWAY
SECTION DETAIL

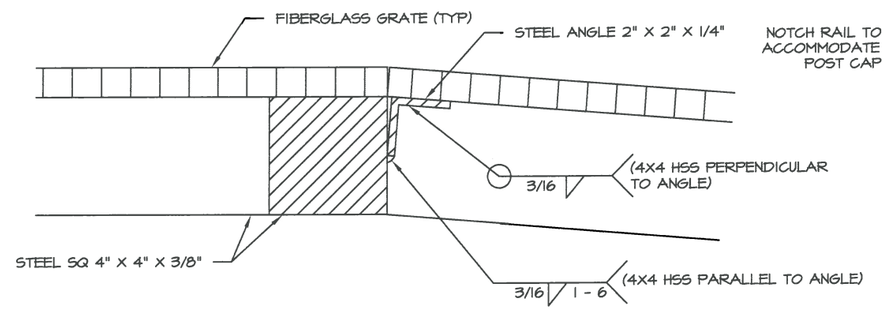

2/19 STEEL ANGLE CONNECTION
SECTION

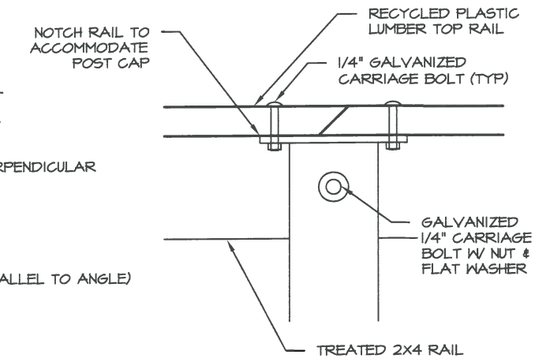

3/19 TOP RAIL SCARF JOINT
DETAIL

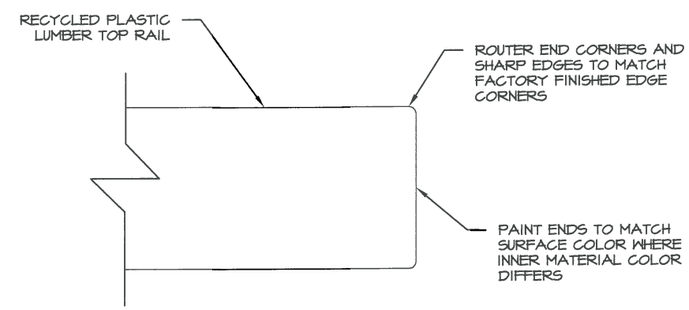

4/19 TOP RAIL ENDS
DETAIL

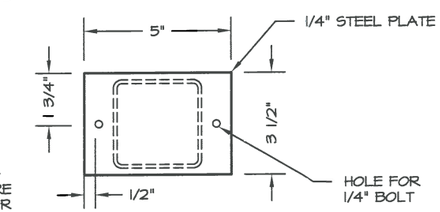

5/19 STEEL HSS POST CAP
DETAIL

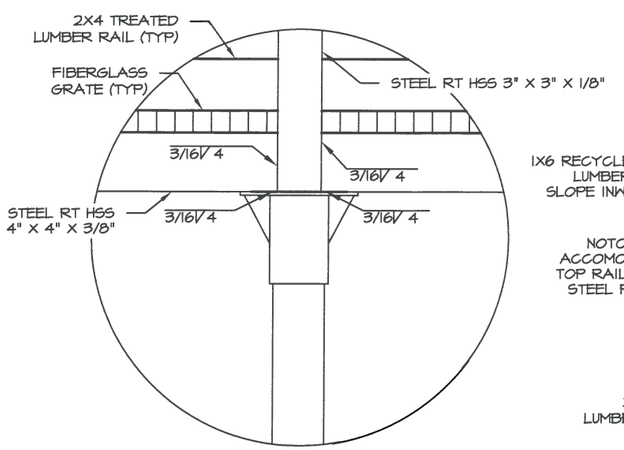

6/19 ELP WALKWAY FRAME
DETAIL

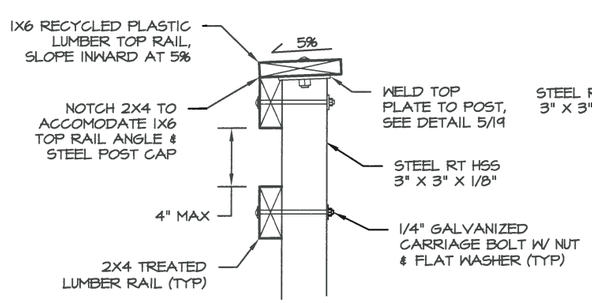

7/19 RAILING
DETAIL

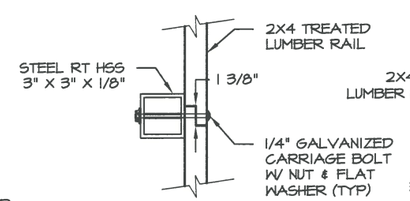

8/19 RABBET JOINT
DETAIL

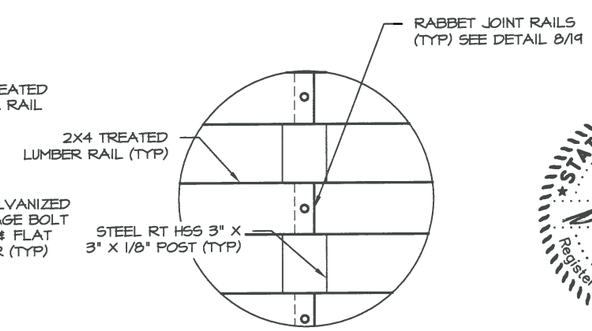

9/19 RAILING CONNECTIONS
DETAIL

STATE OF ALASKA 49TH
Lucas M. Randall
CE - 12595
5/25/16
Registered Professional Engineer

PLANS DEVELOPED BY:
DEPARTMENT OF NATURAL RESOURCES
550 W 7TH AVE SUITE 1940
ANCHORAGE, AK 99501
907. 269. 8791

STATE OF ALASKA DEPARTMENT OF NATURAL RESOURCES

KASILOF RIVER SUA
NORTH SITE IMPROVEMENTS
PROJECT No. 76058-1

RAIL DETAILS

PREPARED: RDR
DRAWN: RDR
REVIEWED: LMR
DATE: 8/3/2016

SHEET 19 OF 20 SHEETS

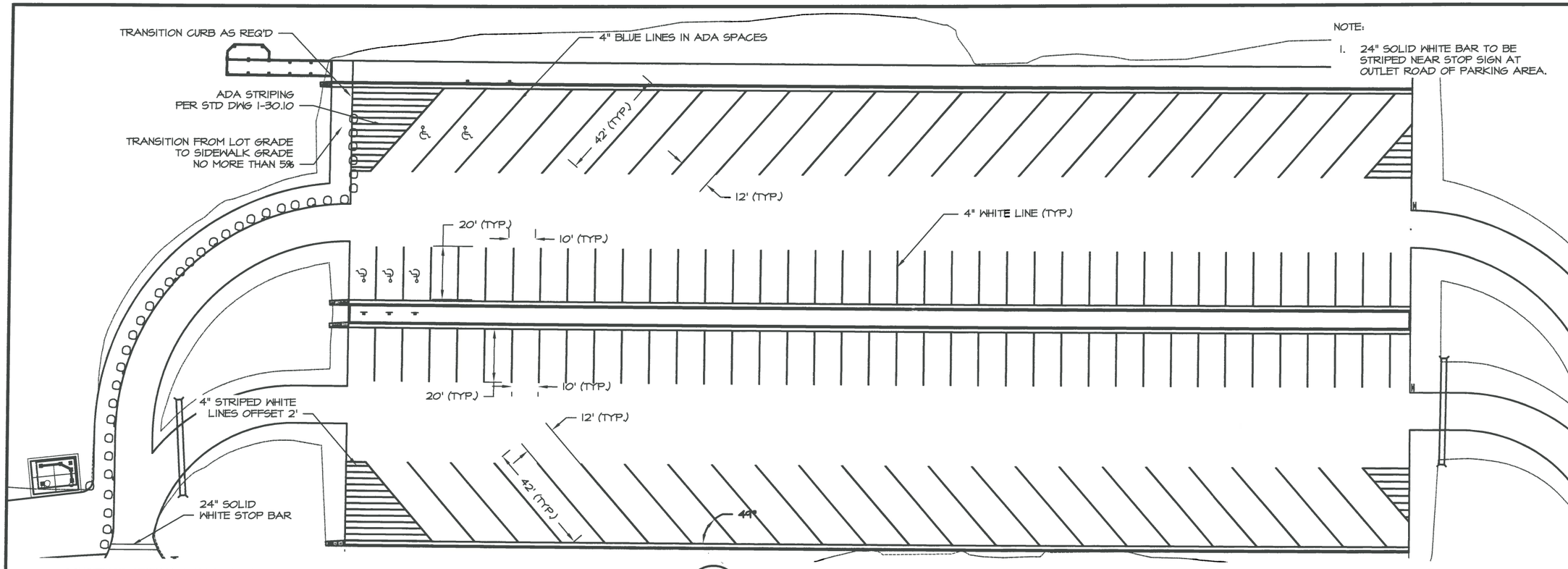

NOTE:

1. 24" SOLID WHITE BAR TO BE STRIPED NEAR STOP SIGN AT OUTLET ROAD OF PARKING AREA.

1/20 STRIPING
PLAN VIEW

GRAPHIC SCALE

40 0 20 40 80

(IN FEET)

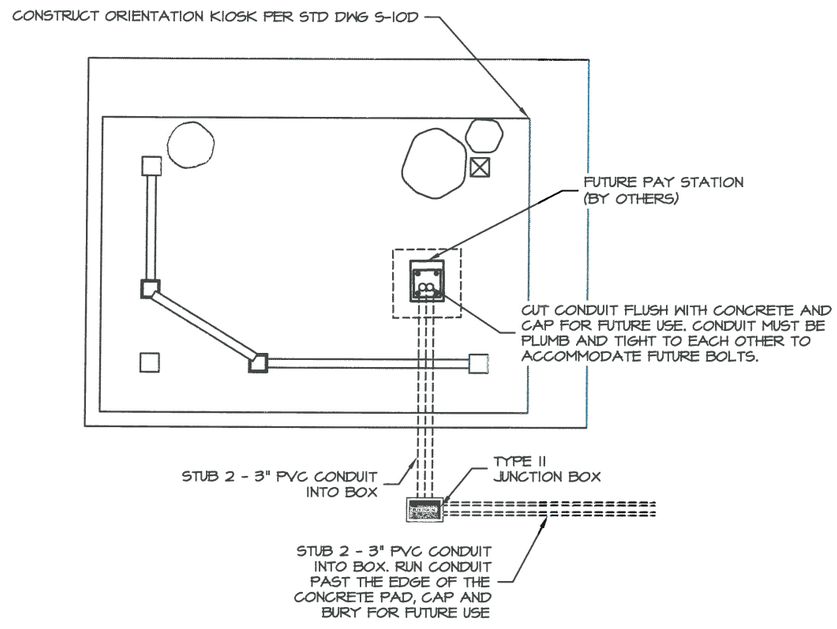

2/20 ORIENTATION KIOSK
PLAN VIEW - ELECTRICAL DETAILS -NTS

STRIPING ESTIMATE SUMMARY

TYPE OF STRIPE	LENGTH (LF)	AREA (SF)
4" SOLID WHITE	3,246	-
STRIPED WHITE	-	1,011
4" SOLID BLUE	144	-
STRIPED BLUE	-	730
HANDICAP SYMBOL	5	-
24" SOLID STOP BAR	18	-

STATE OF ALASKA 49TH
Lucas M. Randall
CE - 12595
8/23/16
Registered Professional Engineer

PLANS DEVELOPED BY:
DEPARTMENT OF NATURAL RESOURCES
550 W 7TH AVE SUITE 1340
ANCHORAGE, AK 99501
907. 269. 8731

STATE OF ALASKA DEPARTMENT OF NATURAL RESOURCES

STRIPING PLAN & KIOSK DETAILS

KASILOF RIVER SUA
NORTH SITE IMPROVEMENTS
PROJECT No. 76058-1

PREPARED: LGN
DRAWN: LGN
REVIEWED: LMR
DATE: 08/17/2016

SHEET 20 OF 20 SHEETS

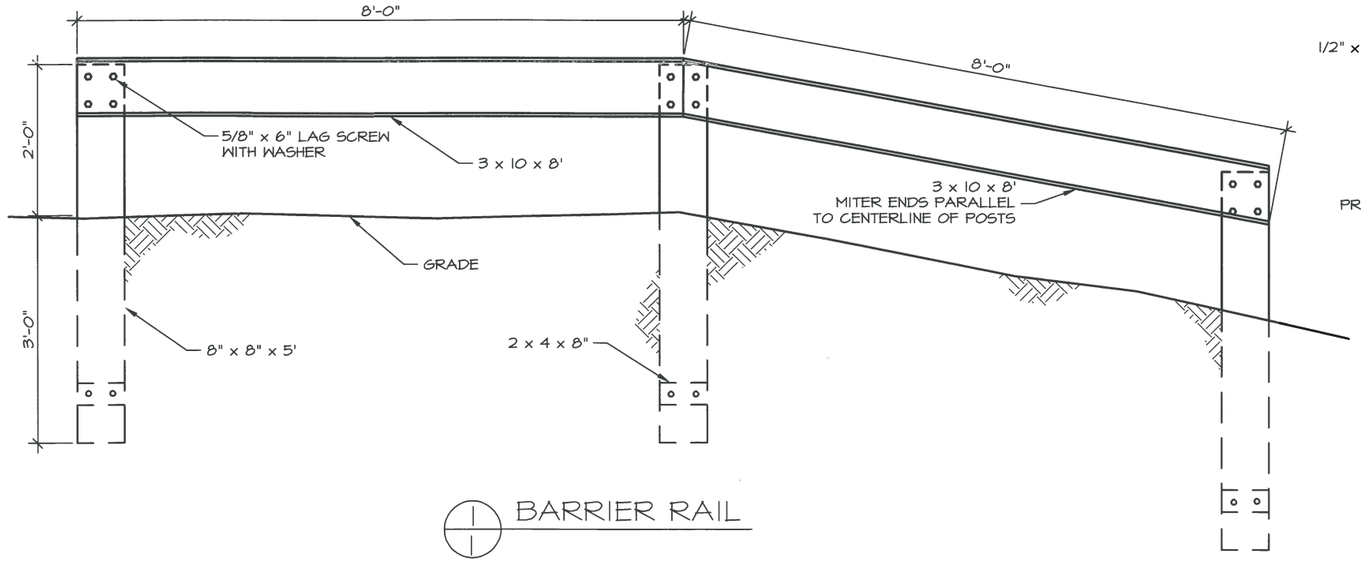

1/1 BARRIER RAIL

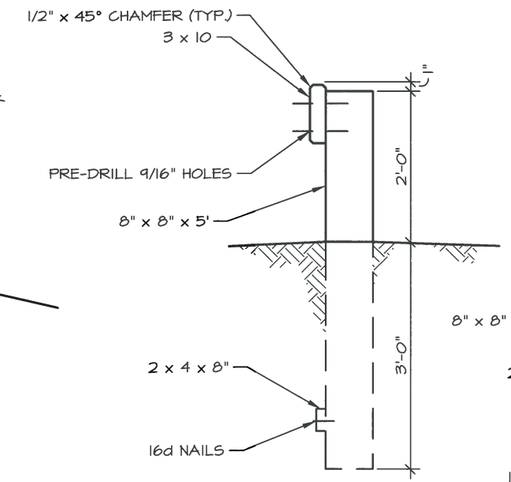

2/1 BARRIER RAIL
SIDE ELEVATION

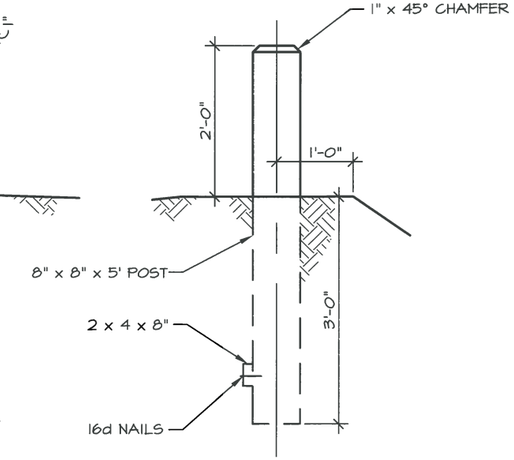

3/1 BARRIER POST

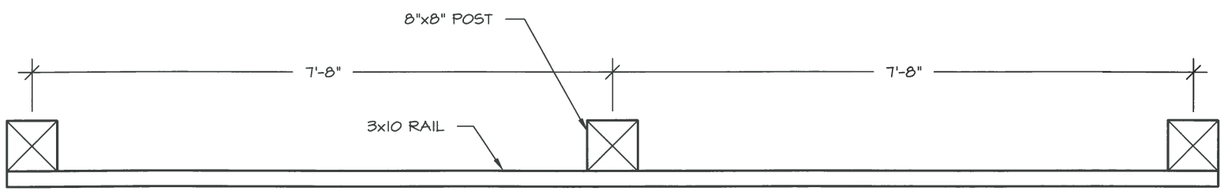

4/1 BARRIER RAIL POST SPACING
FOR 16' OVERALL RAIL LENGTH

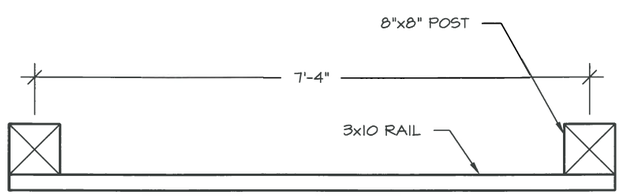

5/1 BARRIER RAIL POST SPACING
FOR 8' OVERALL RAIL LENGTH

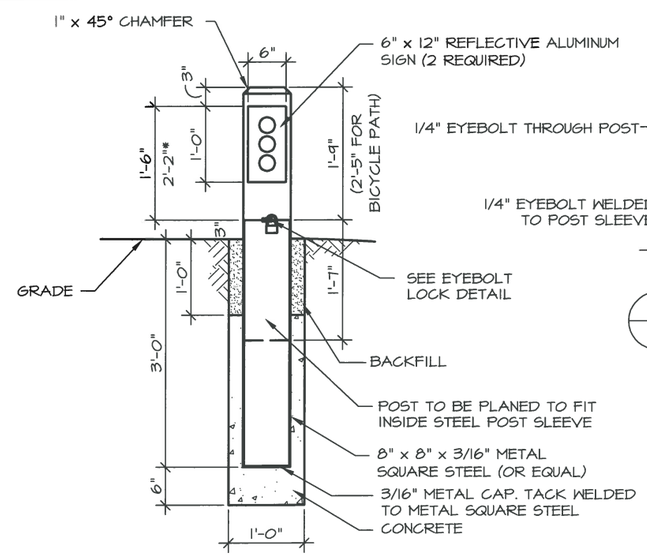

6/1 REMOVABLE BARRIER POST

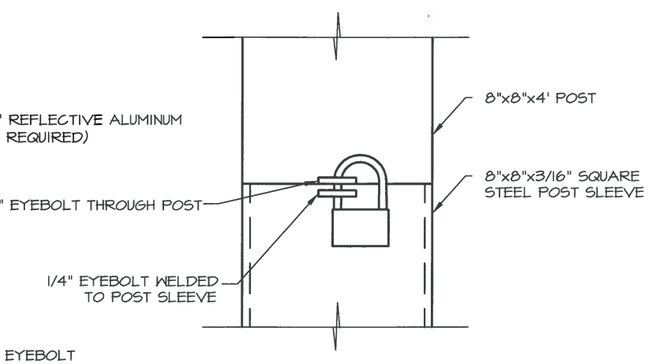

7/1 EYEBOLT LOCK
DETAIL

NOTES:

1. ALL WOOD SHALL BE TREATED .
2. ALL POSTS WILL BE SET PLUMB INTO HAND DUG OR AUGERED HOLES, OR DRIVEN PLUMB. DELETE 2X4 CLEAT ON DRIVEN POSTS

STATE OF ALASKA 49TH Rys B. Miranda CE 11010 2/26/14 Registered Professional Engineer

NO.	REVISION	DATE	APPROVED
14	REPLACED STAMP	12/13	RBM
13	CHANGED ALUMINUM SIGN TO BE REFLECTIVE	12/10	MPS
12	CHANGED STATE PARK LOGO	04/10	MPS
11	CHANGED TITLE BLOCK	12/07	MPS
10	DELETED NOTE ON POST SPACING / ADDED PLAN DRAWING	12/04	MPS
9	MODIFIED TREATED WOOD NOTE	12/04	MPS
8	ADDED END CAP TO REMOVABLE BARRIER POST.	4/04	MPS
7	CHANGED TIMBER POSTS TO ROUGH CUT.	4/04	MPS

STATE OF ALASKA DEPARTMENT OF NATURAL RESOURCES

DESIGN & CONSTRUCTION SECTION

BARRIER RAIL
BARRIER POST REMOVABLE
BARRIER POST

ALASKA STATE PARKS

PREPARED: tlc
DRAWN: tlc
REVIEWED: DH
DATE: 1 MAY 94

SHEET 1
P-5
OF 1 SHEETS

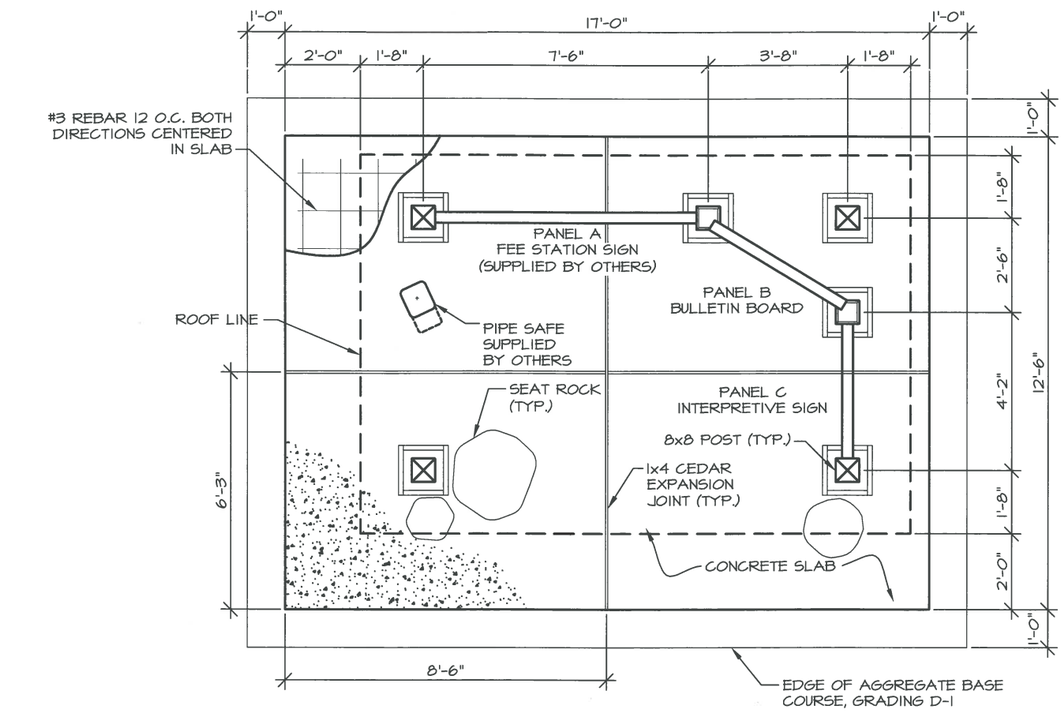

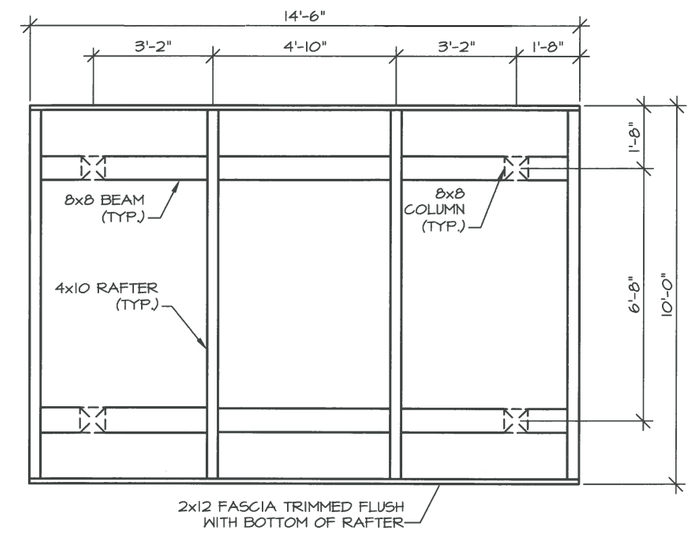

NOTES:

1. ALTERNATE ORIENTATION OF STEEL COLUMN BASES BETWEEN ADJACENT 8x8 POSTS.
2. CHAMFER TOP EDGES OF (2) INTERIOR 8x8 POSTS 1" @ 45°.
3. LIGHT BROOM FINISH THE CONCRETE SLAB.

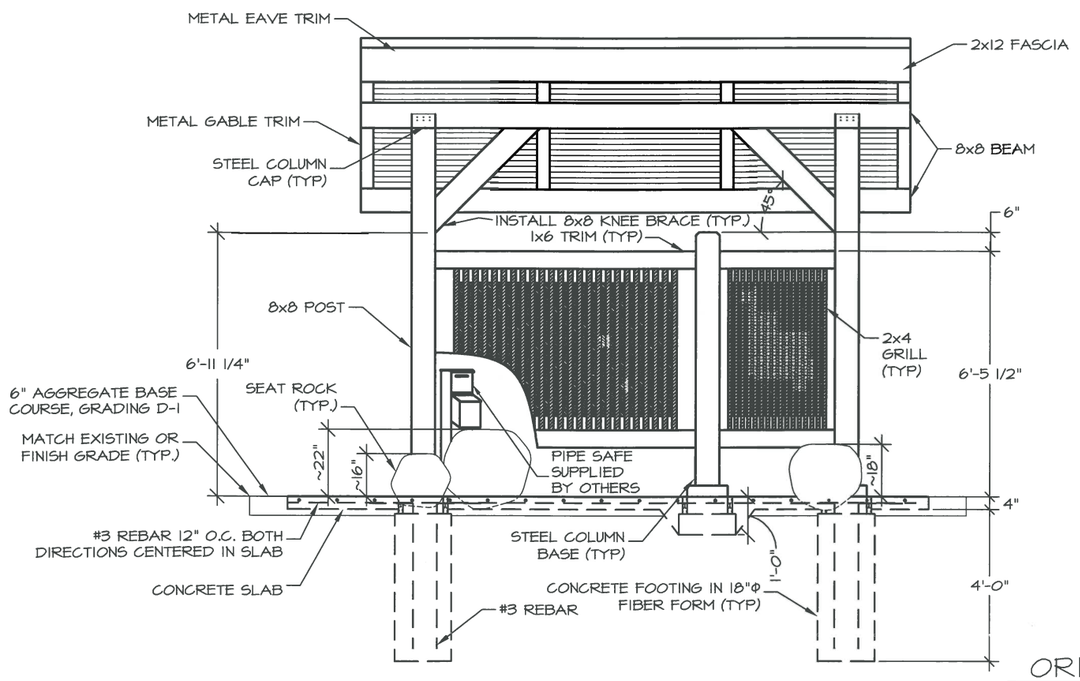

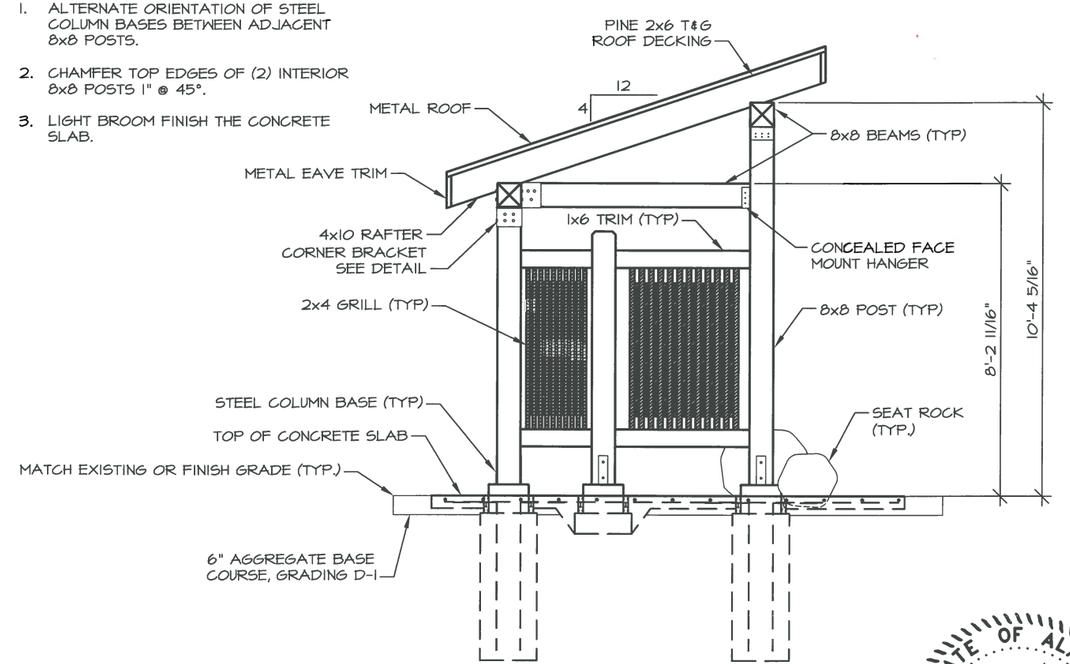

ORIENTATION KIOSK

PLAN & PROFILE

NO.	REVISION	DATE	APPROVED
5	REPLACED STAMP	12/13	RBM
4	ADDED D-1 SHOULDER	12/10	MPS
3	CHANGED CONCRETE FOOTER, ADDED NOTE 3	12/10	MPS
2	UPDATED STATE PARK LOGO	12/10	MPS
1	CHANGED TITLE BLOCK	12/07	MPS

STATE OF ALASKA 49TH
Rys B. Miranda
CE 11010
2/26/14
Registered Professional Engineer

STATE OF ALASKA DEPARTMENT OF NATURAL RESOURCES

DESIGN & CONSTRUCTION SECTION

ORIENTATION KIOSK

ALASKA STATE PARKS

PREPARED: RBM/JAS
DRAWN: AT/RBM/JAS
REVIEWED: MPS
DATE: JAN 2004

SHEET 1
S-10D
OF 3 SHEETS

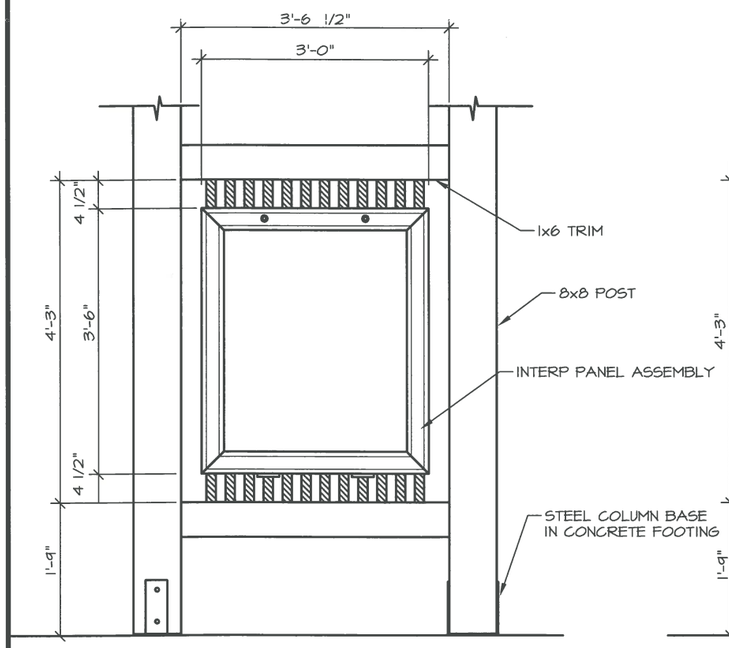

2x4 GRILL W/ INTERP PANEL
DETAILS

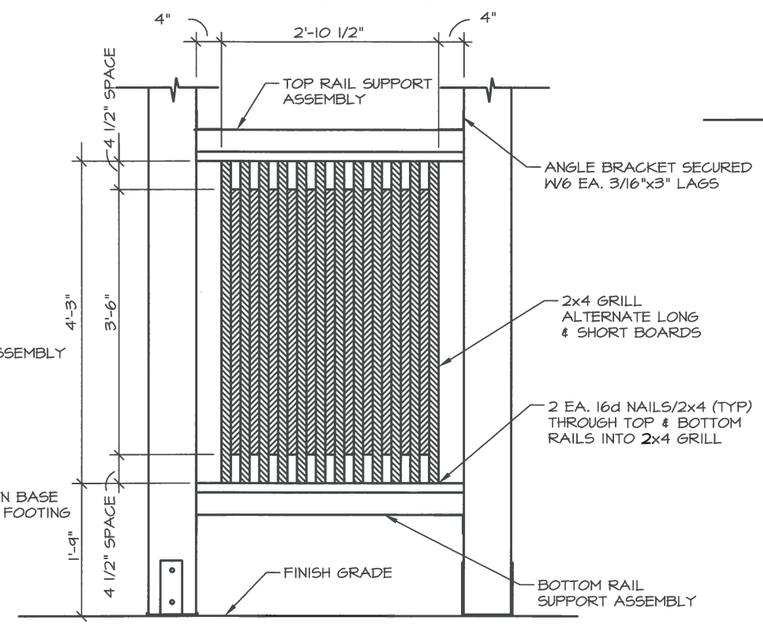

2x4 GRILL
DETAILS - INTERP PANEL & 1x6 TRIM NOT SHOWN

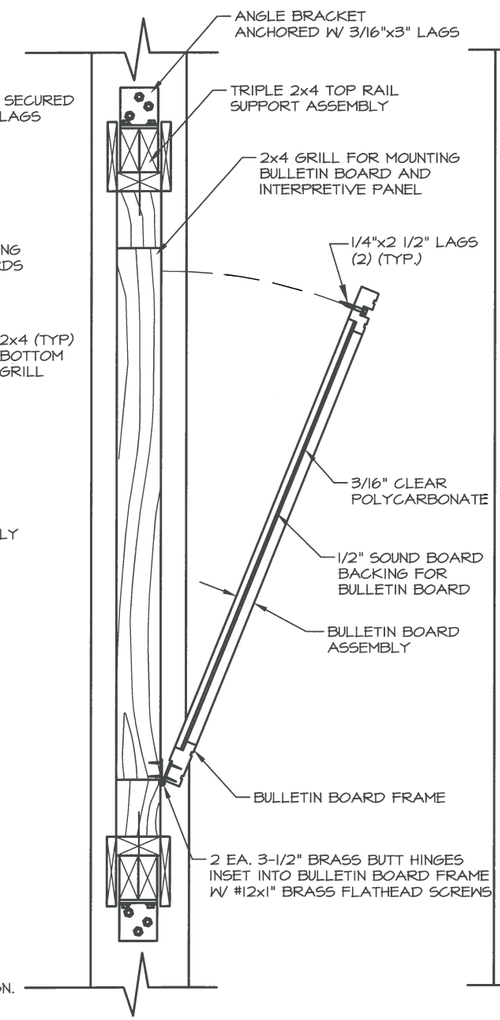

BULLETIN BOARD
SECTION

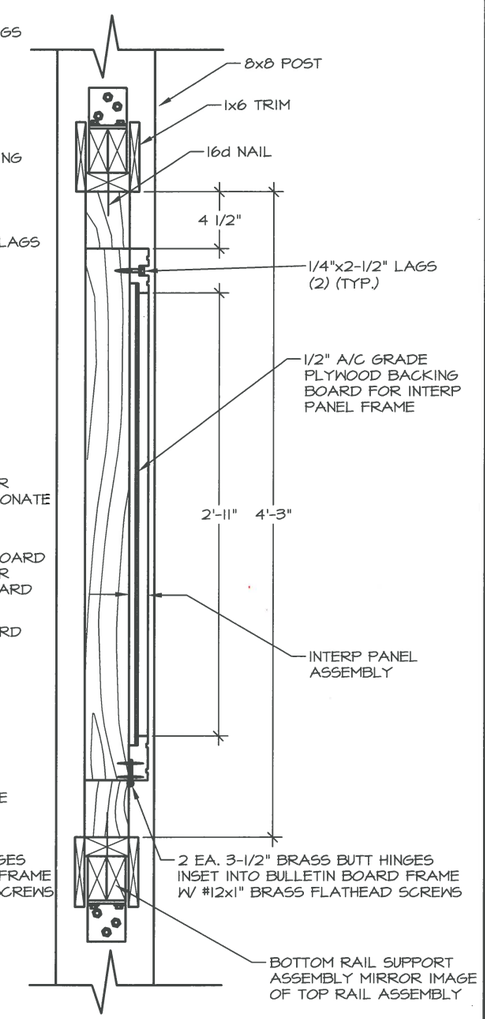

SUPPORT GRILL
SECTION

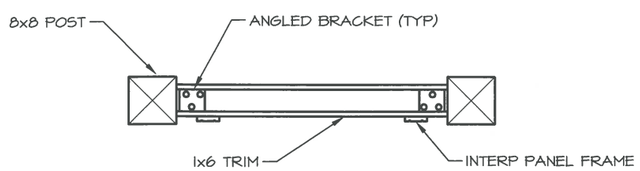

2x4 GRILL
PLAN - PERPENDICULAR TO POSTS

NOTES:
1. NOTCH POSTS TO FIT ANGLE BRACKETS & TOP/BOTTOM SUPPORT RAILS.
2. DO NOT NOTCH POSTS FULL LENGTH OF 2x4 GRILL.

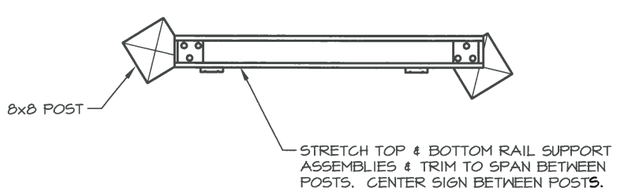

2x4 GRILL
PLAN - ANGLED TO POSTS

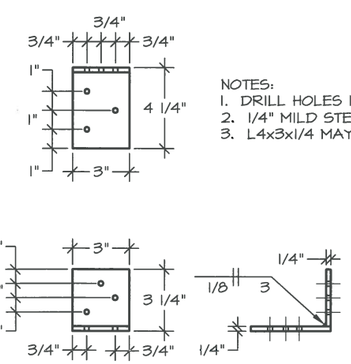

NOTES:
1. DRILL HOLES 1/4"Φ.
2. 1/4" MILD STEEL, (4) REQ'D PER SIGN.
3. L4x3x1/4 MAY BE USED.

ANGLE BRACKET
DETAILS

NOTES:
1. INTERPRETIVE PANEL ASSEMBLY CONSISTS OF INTERPRETIVE GRAPHIC BACKING BOARD AND INTERP PANEL FRAME.
2. INTERPRETIVE GRAPHIC PANEL SUPPLIED BY OTHERS MEASURES 3'-0 1/2"x2'-6 1/2"x1/8". THE CONTRACTOR SHALL MAKE ACCOMMODATIONS FOR THIS GRAPHIC IN MEASUREMENTS AND CONSTRUCTION.

NO.	REVISION	DATE	APPROVED
4	REPLACED STAMP	12/13	RBM
3	CHANGED INTERP FRAME FASTENER SYSTEM	12/10	MPS
2	UPDATED STATE PARK LOGO	12/10	MPS
1	CHANGED TITLE BLOCK	12/07	MPS

STATE OF ALASKA 49TH Rys B. Miranda CE 11010 2/26/14 Registered Professional Engineer

STATE OF ALASKA DEPARTMENT OF NATURAL RESOURCES

DESIGN & CONSTRUCTION SECTION

ORIENTATION KIOSK

ALASKA STATE PARKS

PREPARED: RBM/JAS
DRAWN: AT/RBM/JAS
REVIEWED: MPS
DATE: JAN 2004

SHEET 2
S-10D
OF 3 SHEETS

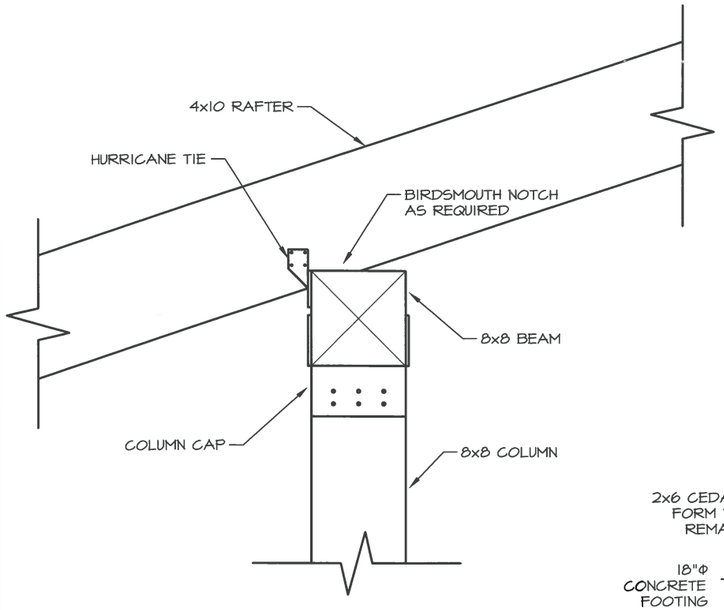

BEAM/RAFTER CONNECTION

DETAILS - 2x6 T&G DECKING & METAL ROOF NOT SHOWN

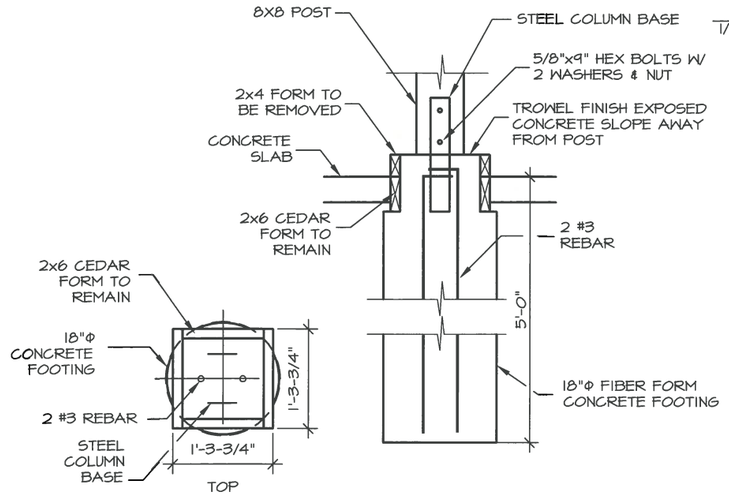

CONCRETE FOOTING

DETAIL

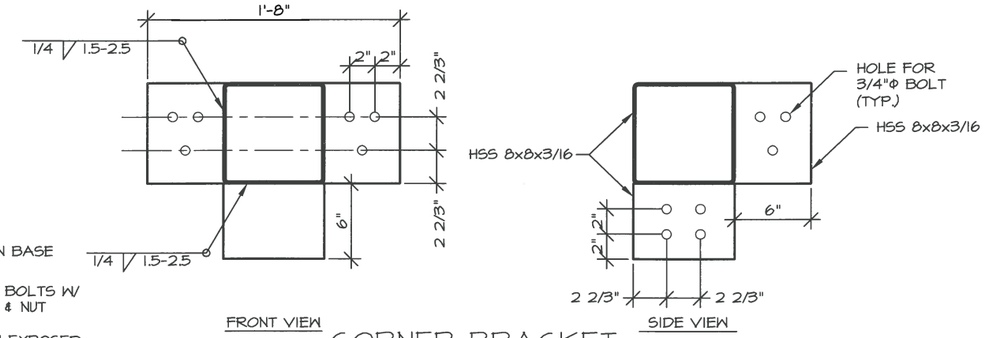

CORNER BRACKET

DETAIL

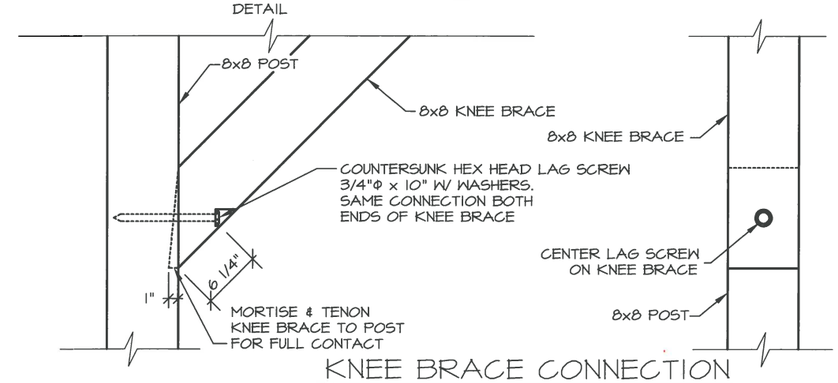

KNEE BRACE CONNECTION

DETAIL

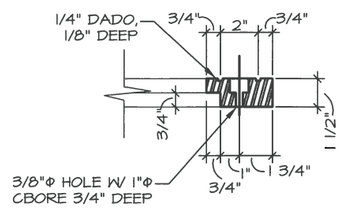

FRAME

SECTION

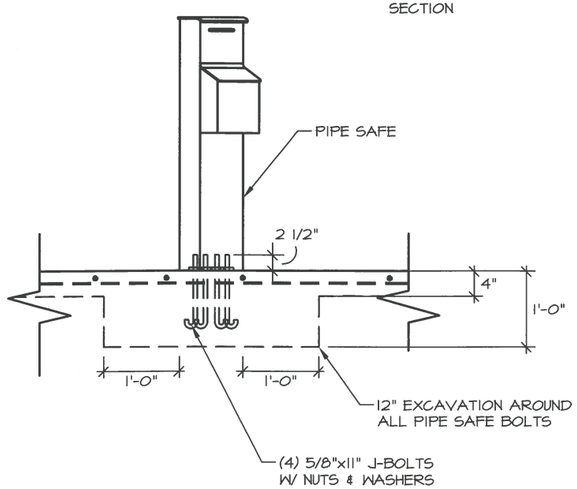

PIPE SAFE

DETAILS

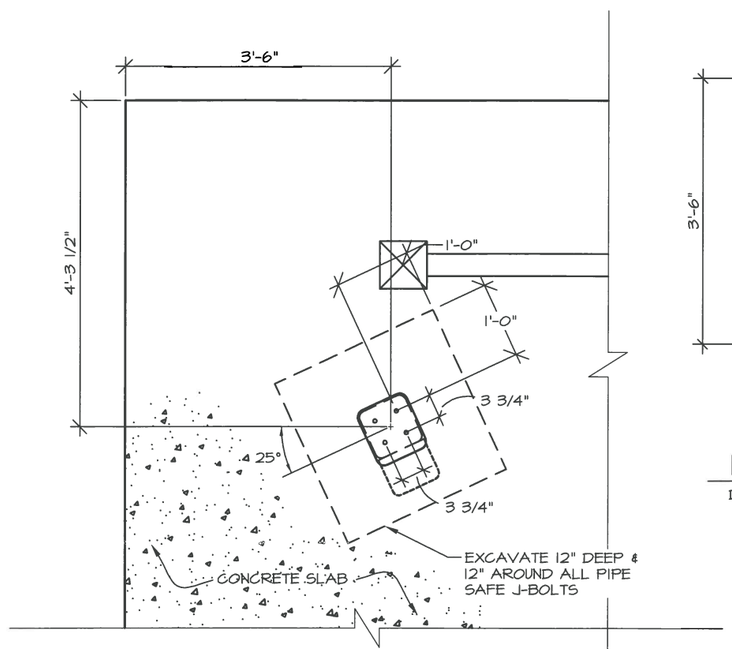

PIPE SAFE BOLT PATTERN

DETAILS

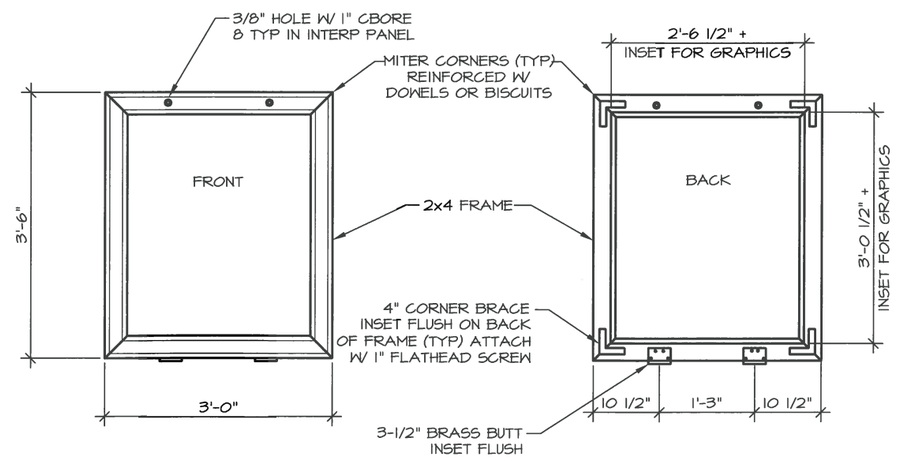

INTERP PANEL/BULLETIN BOARD FRAME

DETAILS

NO.	REVISION	DATE	APPROVED
7	REPLACED STAMP	12/13	RBM
6	INCREASED THE SIZE OF THE J-BOLTS	12/10	MPS
5	ADDED COCRETE FOOTER DETAIL	12/10	MPS
4	ADDED KNEE BRACE CONNECTION DETAIL	12/10	MPS
3	UPDATED STATE PARK LOGO	12/10	MPS
2	CHANGED TITLE BLOCK	12/07	MPS
1	RELOCATED PIPE SAFE	8/07	MPS

STATE OF ALASKA 49TH Rys B. Mirando CE 11010 2/26/14 Registered Professional Engineer

STATE OF ALASKA DEPARTMENT OF NATURAL RESOURCES

DESIGN & CONSTRUCTION SECTION

ORIENTATION KIOSK

ALASKA STATE PARKS

PREPARED: RBM/JAS
DRAWN: AT/RBM/JAS
REVIEWED: MPS
DATE: JAN 2004

SHEET 3

S-10D

OF 3 SHEETS

D-01.02

SHEET 1 of 1

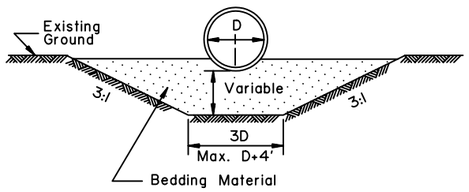

TYPE "A"
FOUNDATION STABILIZATION

To be used in unstable areas as directed by the Engineer.

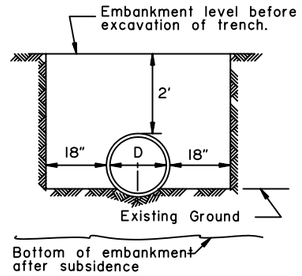

TYPE "B"

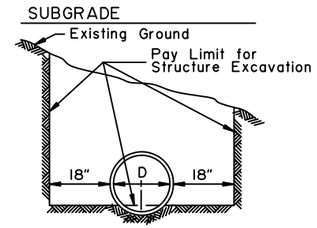

TYPE "C"

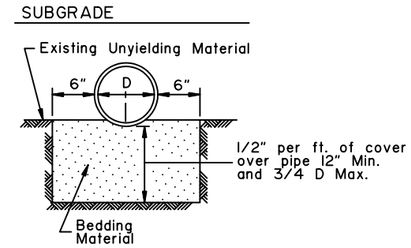

TYPE "D"
ROCK OR UNYIELDING MATERIAL

GENERAL NOTES:

1. Sidefill shall be placed and compacted with care under haunches of pipe and shall be brought up evenly and simultaneously on both sides of pipe to 1 foot above the top of the full length of the pipe.
2. Alternate installation methods may only be used when specified or approved by the Engineer.

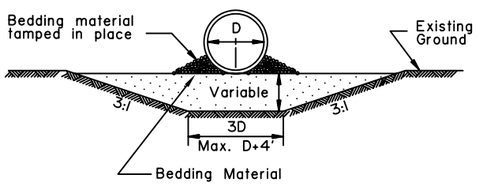

'ALTERNATE'
TYPE "A"
FOUNDATION STABILIZATION

To be used in unstable areas as directed by the Engineer.

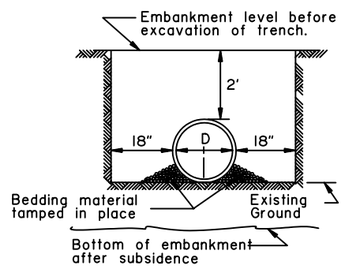

'ALTERNATE'
TYPE "B"

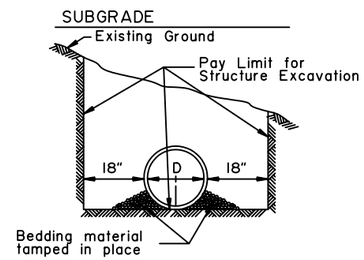

'ALTERNATE'
TYPE "C"

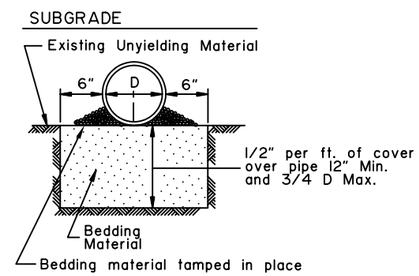

'ALTERNATE' TYPE "D"
ROCK OR UNYIELDING MATERIAL

D = Nominal Pipe Diameter

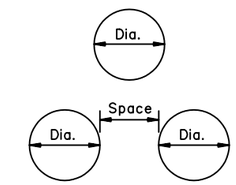

MULTIPLE INSTALLATIONS	
Dia.	Minimum Space Between Pipes
0" - 42"	24"
48" & Over	1/2 Dia. of pipe or 3', whichever is less.

S = Nominal Pipe Arch Span

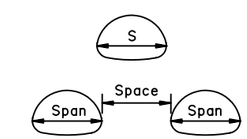

MULTIPLE INSTALLATIONS	
Dia.	Minimum Space Between Pipes
0" - 42"	24"
48" & Over	1/2 Span of pipe arch or 3', whichever is less.

CULVERT PIPE

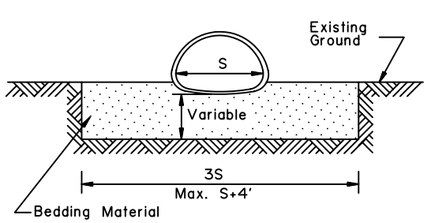

TYPE "A"
FOUNDATION STABILIZATION

To be used in unstable areas as directed by the Engineer.

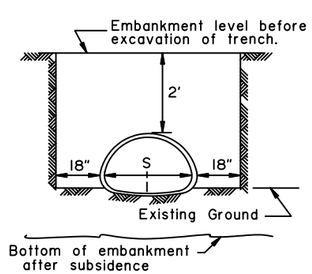

TYPE "B"

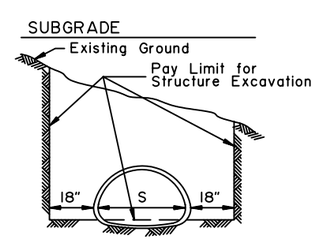

TYPE "C"

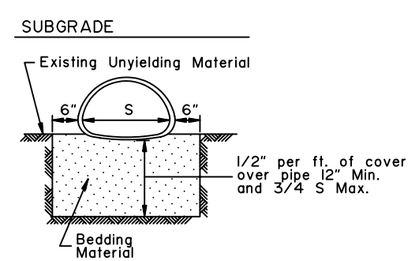

TYPE "D"
ROCK OR UNYIELDING MATERIAL

ARCH

REVISIONS		
Date	Description	By
12/1/87	Delete ref. to Specs.	Gdo
4/1/93	Delete Alt. Arch	Gdo

State of Alaska
Department of Transportation
& Public Facilities

CULVERT PIPE & ARCH INSTALLATION DETAILS

APPROVED

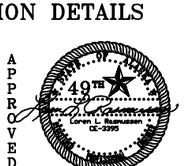

Date 7/15/82

D-01.02

G-04.10S

SHEET 1 of 1

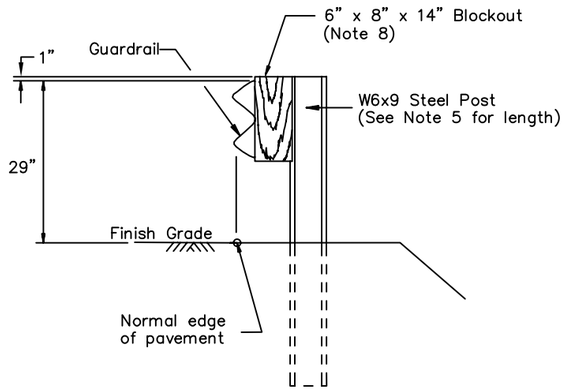

TYPE I POST INSTALLATION

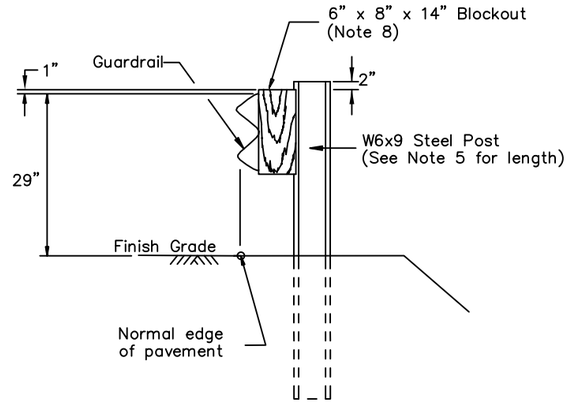

TYPE II POST INSTALLATION

(Facilitates raising rail for future overlays.)

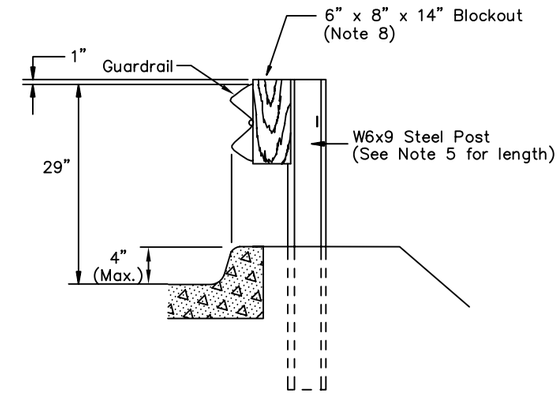

CURB DETAIL

TYPE III POST INSTALLATION

NOTE: Curb should not be installed with guardrail when the speed limit exceeds 40 mph.

GENERAL NOTES:

1. Attach guardrail reflectors at 50' centers beginning with the first post. Use Type A reflectors unless specified otherwise.
2. Provide hardware compliant with the AASHTO/AGC/ARTBA "A Guide to Standardized Highway Barrier Hardware," latest edition.
3. See Standard Drawing G-00 for hardware details.
4. Mount rail to block with bolt on approaching traffic side of block web.
5. See Standard Drawing G-10 for post lengths corresponding to different combinations of slope and behind-post embankment width.
6. Typical post spacing is 6'-3" center to center.
7. This barrier is acceptable under NCHRP 350, TL-3.
8. Use wood, rubber, plastic, or other NCHRP 350 or MASH approved blockouts designed to be used with steel posts
9. Use 25 linear foot transition to match height of existing or new rail elements and end treatments.
10. W6x8.5 steel post may be substituted for W6x9 steel post.

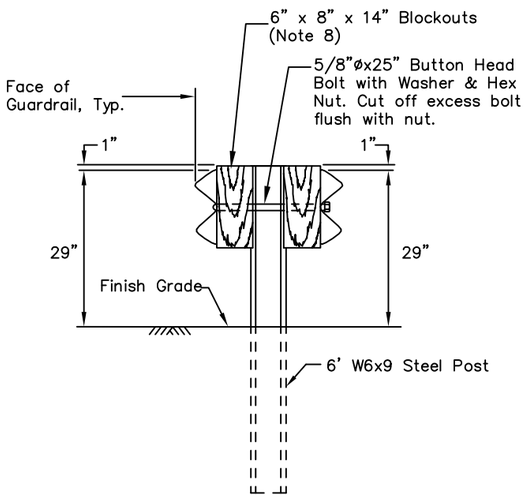

TYPE IV DOUBLE SIDED INSTALLATION

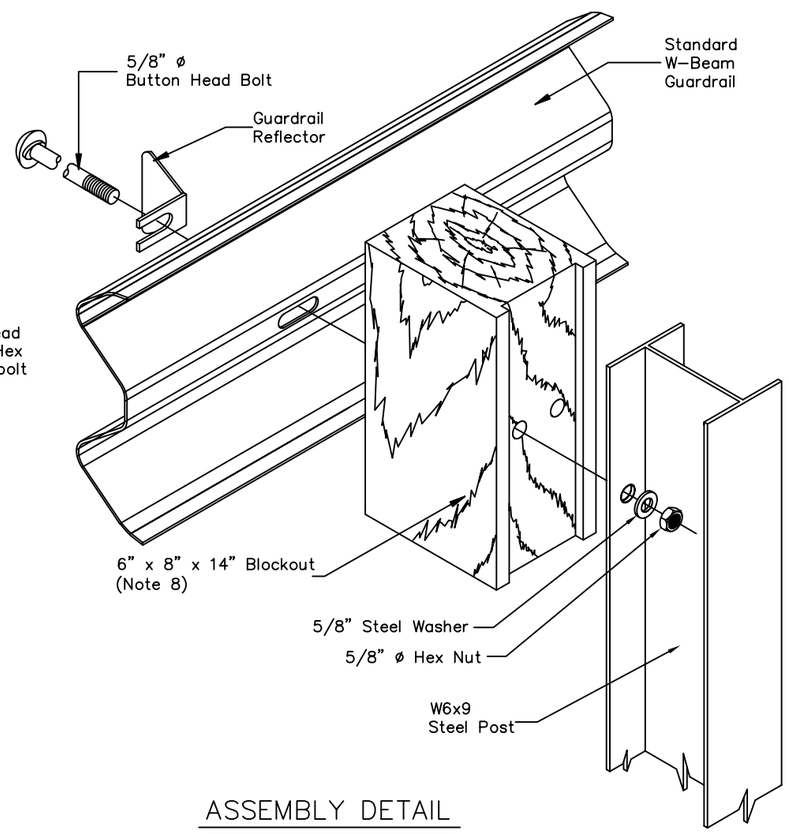

ASSEMBLY DETAIL

(Type I post shown)

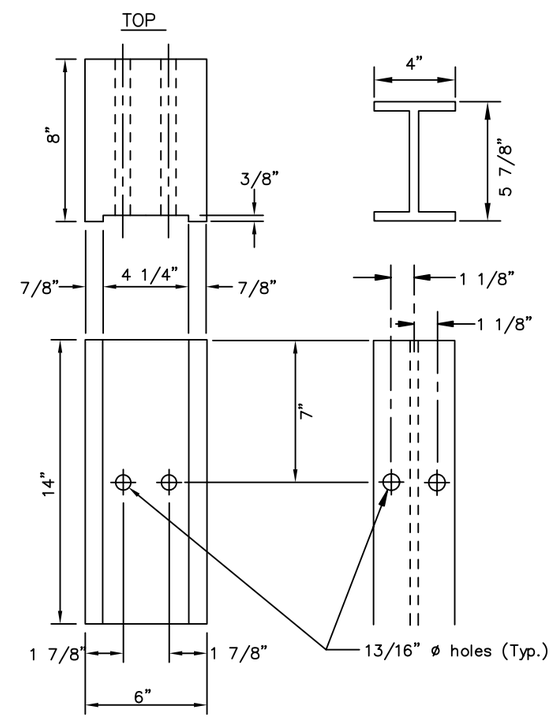

BACK

6" x 8"
WOOD BLOCK

FACE

W6x9
STEEL POST

REVISIONS		
Date	Description	By
3/1/83	Revised gen. notes	Gdo
1/1/86	Revised hanger detail	Gdo
3/15/99	Block and post length	KJS
4/1/13	Add double-sided detail and increase g.r. height	JCJ

State of Alaska
Department of Transportation
& Public Facilities

STEEL POST
W-BEAM GUARDRAIL

APPROVED

STATE OF ALASKA 49TH
Jefferson G. Jeffers
CE 12295
4/1/13
REGISTERED PROFESSIONAL ENGINEER

Date 05/15/13

G-04.10S

G-10.01

SHEET | of |

GENERAL NOTES:

1. This drawing is to be used for post length determination only. See the plans for slopes and behind-post embankment widths.
2. To determine post length, identify the case that matches site conditions and read the length corresponding to the pertinent guardrail type.
3. These dimensions apply to both curbed and uncurbed sections.

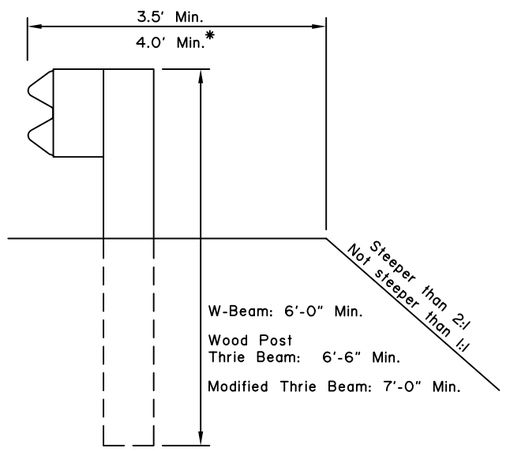

CASE 1

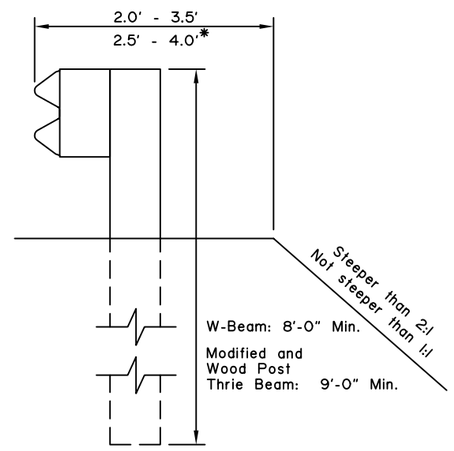

CASE 2

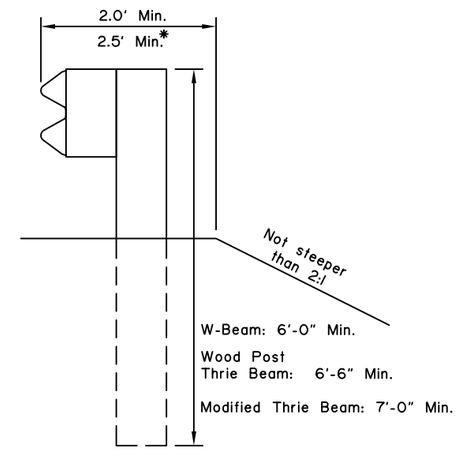

CASE 3

*with Modified Thrie Beam'

REVISIONS		
Date	Description	By
12/2/99	Delete Case 4,5, and 6	KJS

State of Alaska
Department of Transportation
& Public Facilities

BEAM GUARDRAIL POST INSTALLATION

APPROVED

Date 3/15/99

G-10.01

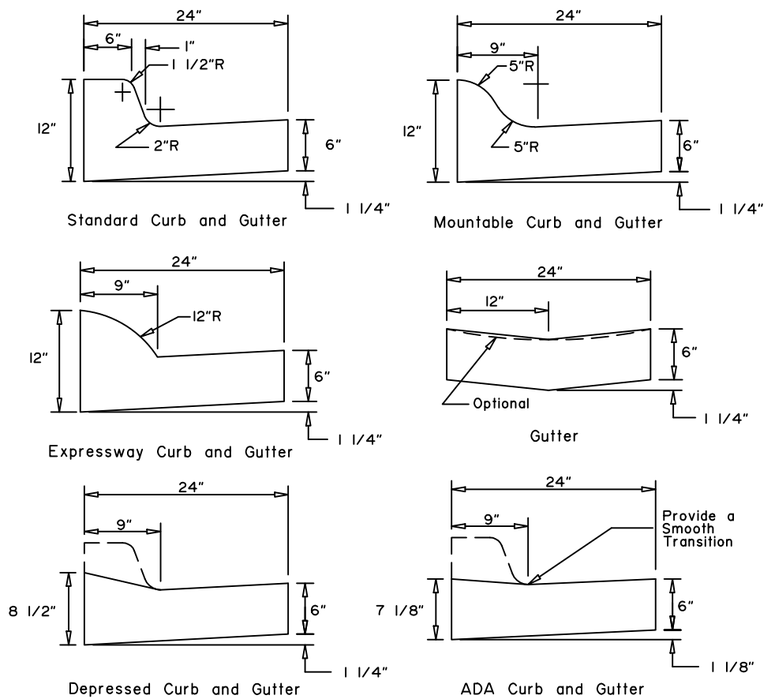

CURB and GUTTER DETAILS

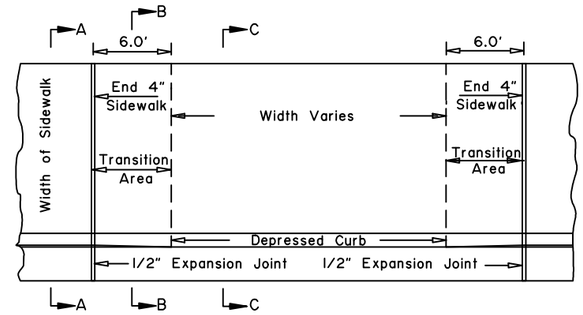

DRIVEWAY CURB CUT DETAILS

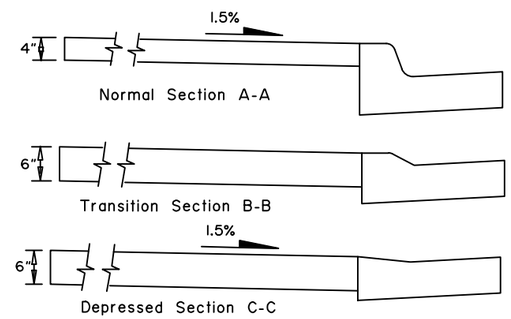

CONSTRUCTION NOTES:

1. Use the type of curb and gutter shown on the plans.
2. Construct ramp runs and landings of concrete, regardless of whether the sidewalk is asphalt or concrete.
3. Construct ramp slopes at a 7.7% nominal grade, or flatter. Ramp slopes may be increased to a maximum of 8.3% when site conditions warrant it. Ramp lengths should be increased to keep grades under the 8.3% maximum, but are not required to exceed 15.0 feet. The resulting ramp grade at a 15.0 foot ramp length is acceptable even if it exceeds 8.3%.
4. Construct flare slopes at 8.3% (measured paralllel to the curb line) or flatter, sidewalk cross slopes at 1.5% nominal (1.0% min. and 2.0% max), and ADA Curb and Gutter gutter pan slopes at 4.7% nominal. Construct grade breaks perpendicular to ramp runs.
5. Do not construct flare slopes steeper than 10.0%, sidewalk cross slopes steeper than 2.0% and ADA Curb and Gutter gutter pan slopes steeper than 5.0%. These are the steepest slopes allowed under the 2006 ADA Standards for Transportation Facilities.
6. Provide a coarse broomed finish on ramp runs perpendicular to the ramp slope.
7. When approved by the Engineer, curb returns may be replaced with flares at locations where access to the side of a ramp run is free of poles, utility boxes, other obstructions, or non-accessible surfaces such as a dirt planter strips. See Standard Drawing I-22 for flare details.
8. Install 24" wide detectable warning tiles for the full width of the ramp. Provide tiles with truncated domes meeting Section 705.1 of the 2006 ADA Standards for Transportation Facilities. Align truncated dome pattern in the predominant direction of wheelchair travel to permit wheels to roll between domes.
9. Maximum cross slope on upper landings, measured in any direction, is 2.0%. Maximum cross slope on ramps is 2.0% measured perpendicular to the ramp run.

DESIGN NOTES:

1. Use Mountable or Expressway curbs on medians and traffic islands.
2. These details are compliant with the 2006 ADA Standards for Transportation Facilities.

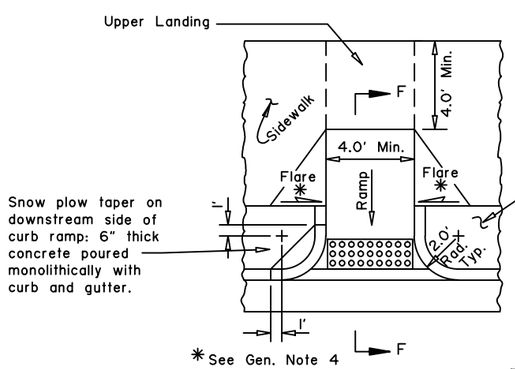

PLAN

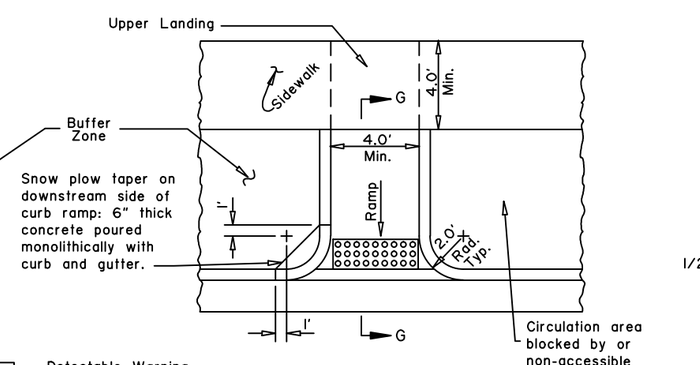

PLAN

= Detectable Warning Tile (see Note 8)

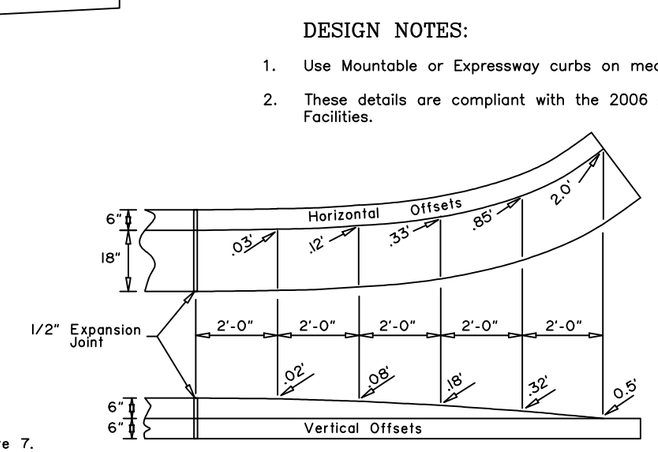

CURB and GUTTER TERMINATION TRANSITIONS

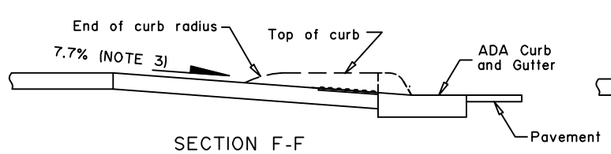

SECTION F-F
Returned Curb Ramp with Sidewalk for Pedestrians

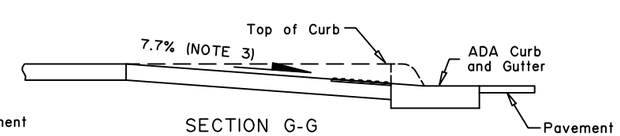

SECTION G-G
Returned Curb Ramp for Pedestrians

Note: Drawing not to scale

REVISIONS		
Date	Description	By
5/31/12	ADA Updates	JCJ
3/31/15	Slopes and cross slope	JCJ
7/1/16	2006 ADA Stds Update	LRG

State of Alaska DOT&PF
3132 Channel Dr., Juneau, AK
Phone: (907) 465-2960

CURB CUT, CURB & GUTTER AND CURB RAMP DETAILS

STATE of ALASKA 49th Lars R. Gregovich CE-8065 REGISTERED PROFESSIONAL ENGINEER 6-15-16

Eff. Date: 7/1/16

I-20.20

I-30.10

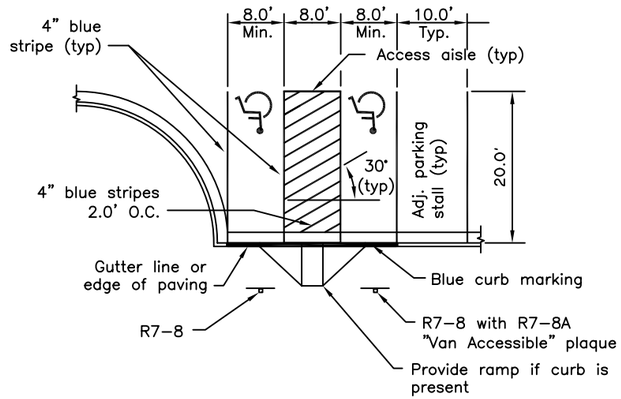

PARKING LOT ACCESSIBLE PERPENDICULAR PARKING

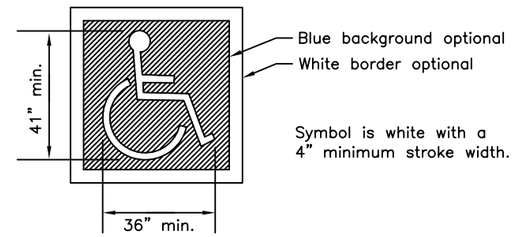

PAVEMENT MARKING SYMBOL DETAIL

GENERAL NOTES:

1. Accessible aisles and accessible routes and those pathways leading from the accessible parking space to the sidewalk shall be free of any obstructions, fixtures or loose surfaces.
2. See standard drawing I-20, I-21, I-22 for curb and curb ramp details.
3. All curb ramps shall be constructed of concrete.
4. The slope for all accessible parking spaces, van accessible parking spaces and access aisles shall not exceed 50:1 in any direction.
5. Although only perpendicular ramps are shown, either parallel or perpendicular ramps are allowable, space permitting.

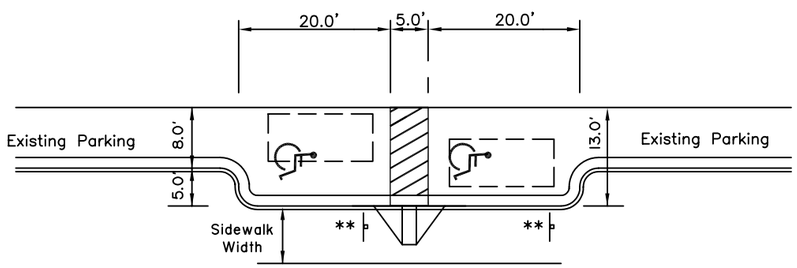

ACCESSIBLE ON-STREET PARALLEL PARKING PARTIAL INSET

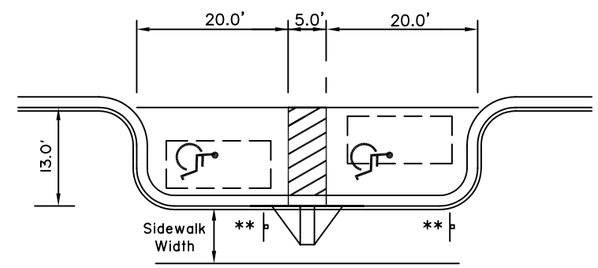

ACCESSIBLE ON-STREET PARALLEL PARKING FULL INSET

** R7-8 "Reserved Parking" and, where appropriate (see note 3), R7-8A, "Van Accessible".

ON-STREET PARALLEL PARKING NOTES

1. The 13' width provides for 8' wide parking with a 5' wide access aisle on either side of a car.
2. Add a new curb ramp and 5' aisle between parking places for each additional two accessible parking spaces.
3. Parking spaces may be made van accessible by providing an unobstructed 8' sidewalk width next to each parking space. Ensure curb ramps, parking meters, sign posts, etc. do not encroach on the area where a van's lift would operate.
4. In some cases, ADAAG may allow normal-width parking spaces at the beginning and end of blocks to be designated as accessible. See the latest ADAAG.

REVISIONS		
Date	Description	By

Sheet 1 of 1

State of Alaska
Department of Transportation
& Public Facilities

ACCESSIBLE PARKING

APPROVED

Date 2/28/03

I-30.10

S-01.00

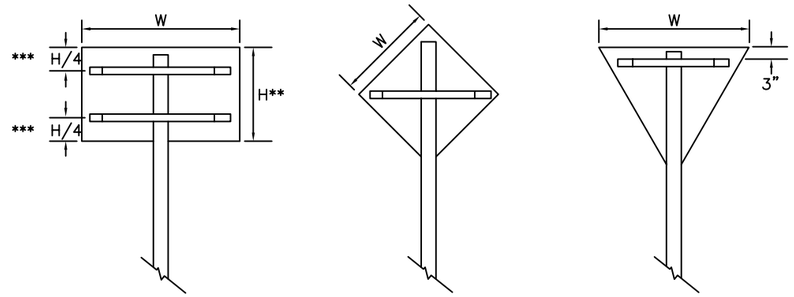

***Use one brace when H ≤ 18"
Use two braces when 18"< H < 48"
Use three braces when H ≥ 48"

** Position of brace may be varied to match Predrilled mounting holes in panel

SIGN BRACING PLACEMENT

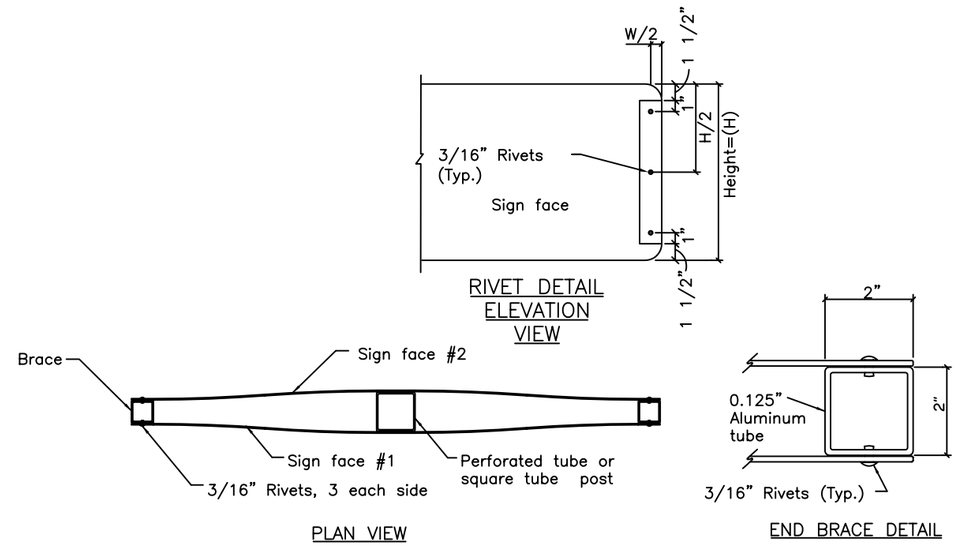

SMALL STREET NAME SIGN (D3-1, D3-1A, D3-1D) BRACING DETAILS

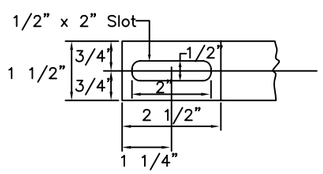

DETAIL OF BRACE SLOT
Elevation view

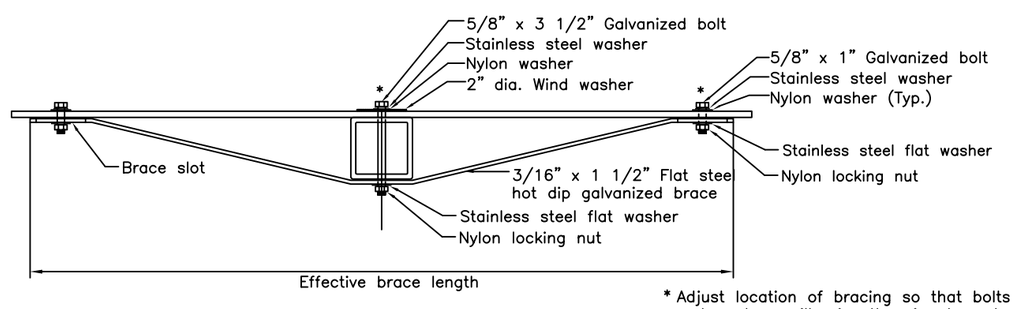

* Adjust location of bracing so that bolts and washers will miss the sign legend

TUBE POST SIGN BRACING
Plan view

SIGN WIDTH(W)	EFFECTIVE BRACE LENGTH		
	WARNING	YIELD	OTHER
30"	36"	24"	24"
36"	42"	30"	30"
42"	48"	–	36"
48"	TWO POSTS	36"	42"

< 30" No bracing required and use square tube

REVISIONS		
Date	Description	By

Sheet 1 of 1

State of Alaska
Department of Transportation
& Public Facilities

BRACING FOR SIGNS
MOUNTED ON SINGLE POST

APPROVED

Date 2/28/03

S-01.00

S-05.01

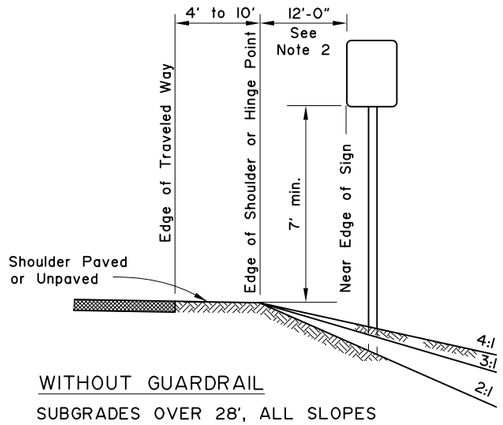

WITHOUT GUARDRAIL

SUBGRADES OVER 28', ALL SLOPES

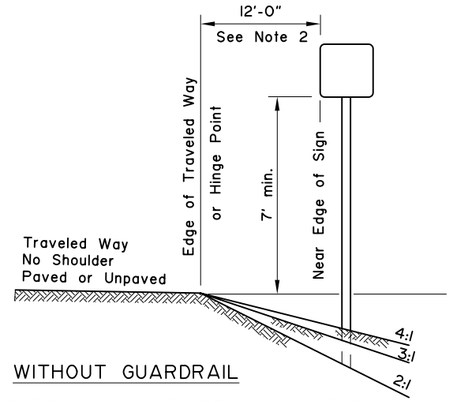

WITHOUT GUARDRAIL

SUBGRADES 24' TO 28', ALL SLOPES

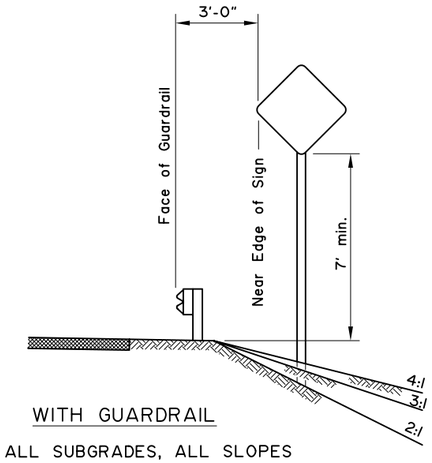

WITH GUARDRAIL

ALL SUBGRADES, ALL SLOPES

GENERAL NOTES

1. Unless shown otherwise on the plans, the standard sign offset is 12'. The minimum is 6'.
2. If signs extend over sidewalks, the minimum vertical clearance is 7'-0".
3. Add 6" to mounting height on unpaved roads.
4. If signs extend over bike paths, the minimum vertical clearance is 8' 0".
5. When signs are placed 30' or more from the edge of traveled way, mount them with the bottom of the sign at least 5' above the road surface at the near edge of the road.
6. When multiple hinged sign supports are used, mount hinges at least 7' above the ground.

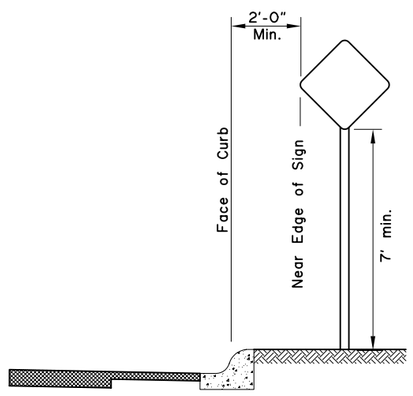

CURB WITHOUT SIDEWALK

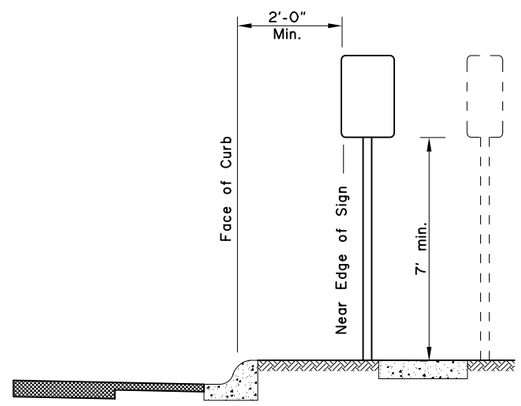

CURB WITH PARKWAY AND SIDEWALK

(If R/W width permits, signs should be placed behind sidewalk.)

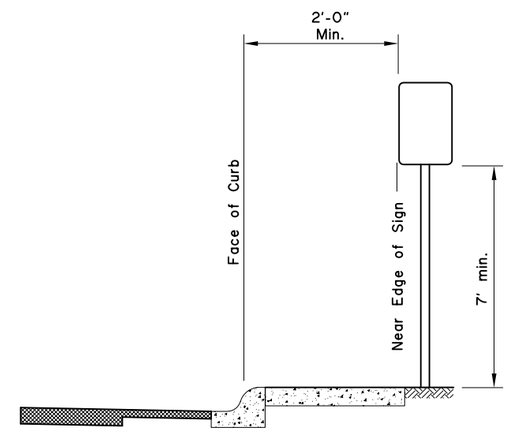

CURB WITH SIDEWALK WITHOUT PARKWAY

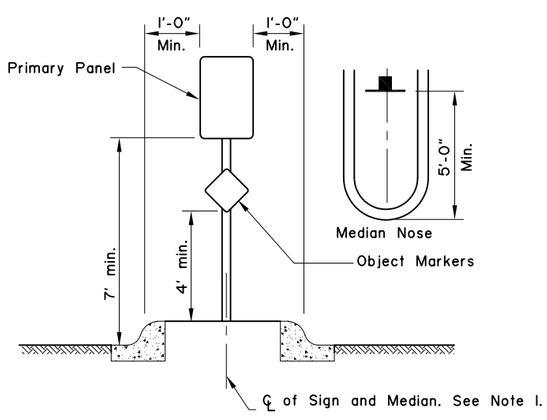

RAISED MEDIANS

Minimum 4' Width for Signing

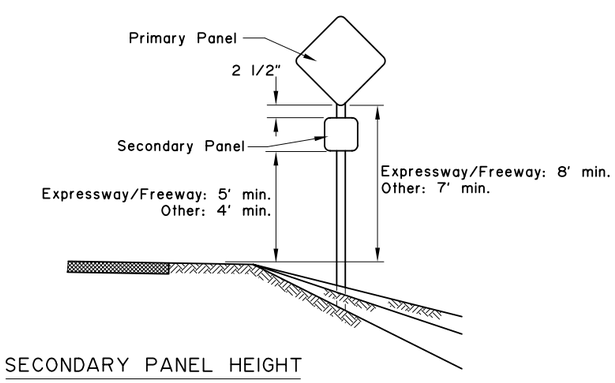

SECONDARY PANEL HEIGHT

ALL TWO PANEL MOUNTING

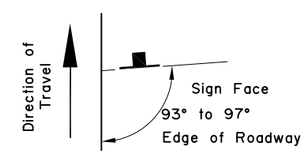

SIGN POSITIONING

REVISIONS		
Date	Description	By
4/3/01	Revised Sign Heights	KJS

Sheet 1 of 1

State of Alaska
Department of Transportation
& Public Facilities

POST MOUNTED SIGN
OFFSET AND HEIGHT

APPROVED

Date 7/15/82

S-05.01

T-32.10

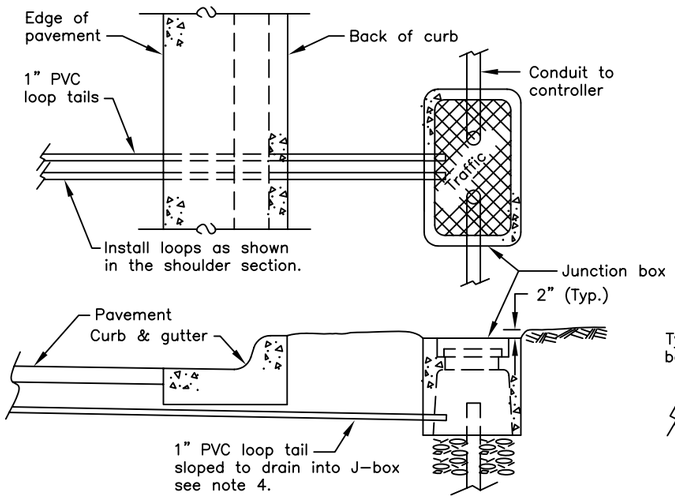

CURB SECTION

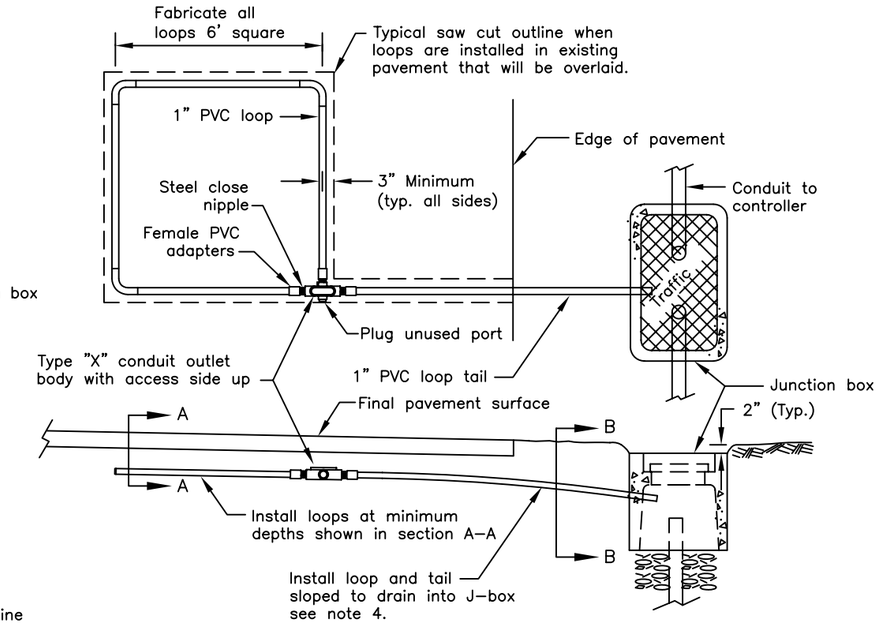

SHOULDER SECTION

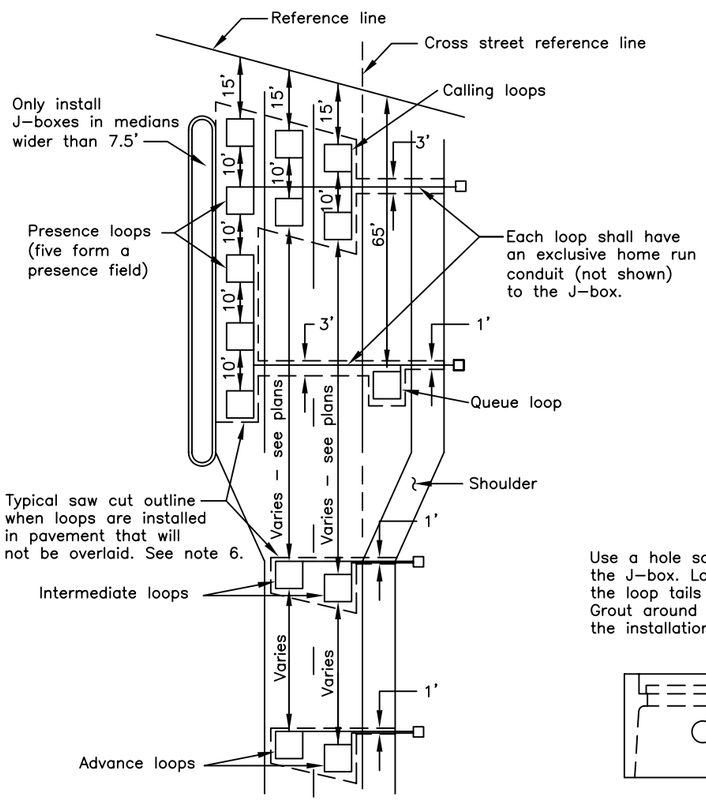

TYPICAL LOOP SETBACKS

Measure the setbacks from the reference line along the center of each lane.

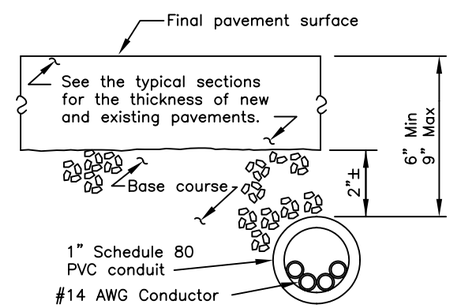

SECTION A-A

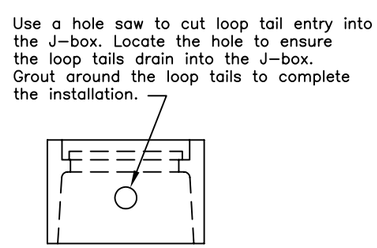

VIEW B-B

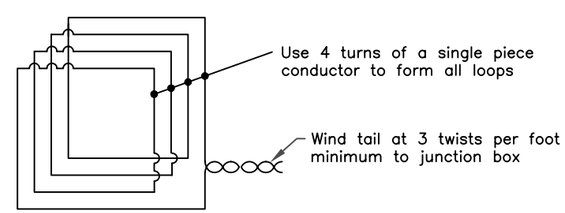

LOOP WIRING DETAIL

TYPICAL PVC CONDUIT ENCASED LOOP DETECTOR INSTALLATION

GENERAL NOTES

1. Solvent weld all PVC to PVC joints. Use hot dip galvanized steel type X outlet bodies to join the loops and tails.
2. Use tube loop wire per IMSA specification 51-5 with the optional polyethylene tubing.
3. Install and test all loop detectors before overlaying the existing pavement or paving the new roadway.
4. Drill five 1/4" weep holes on 12" centers in the underside of the conduit at the low spot when the loop and tail cannot be installed to drain into the J-box. If the Engineer allows 90 degree elbows to be used, drill a 1/4" hole in the low point.
5. When installing loop detectors in existing pavement, cut the asphalt with a saw and remove all asphalt within the saw cut.
6. Where existing pavement will not be overlaid, cut the pavement with a saw as follows:
   A. Remove all pavement from the length of the five loop presence fields.
   B. Enclose all loops that enter a common junction box within one saw cut area.
   C. Cut to within 12" of lane and edge lines to preserve them.
   D. Remove asphalt to gutter where there are no edge lines.
   E. Cut across lane lines when loops are side by side.
   F. Cut trenches crossing a lane a minimum of 3' wide.
   G. Cut trenches crossing a shoulder a minimum 12" wide.
7. Heat and tack coat the edges of existing pavement before paving cutouts. Compact the asphalt mixture with a self-propelled steel wheeled roller. Furnish asphalt mix that conforms to section 401 of the Specifications, and is approved by the Engineer. Maintain the replacement asphalt temperature at the mixing temperature specified in the approved mix design until compaction has begun.
8. To establish the reference lines, extend the right edges of the outermost through lanes across the intersection.

REVISIONS		
Date	Description	By

Sheet 1 of 1

State of Alaska
Department of Transportation
& Public Facilities

LOOP DETECTOR INSTALLATION

APPROVED

Date 2/28/03

T-32.10

T-34.01

SHEET | of |

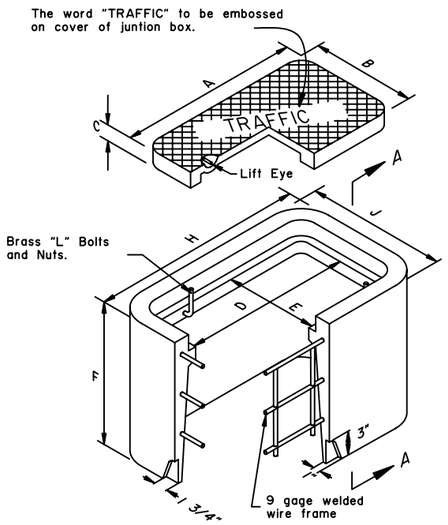

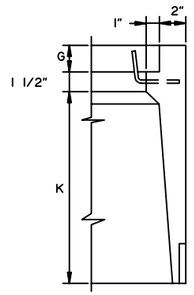

SECTION A-A

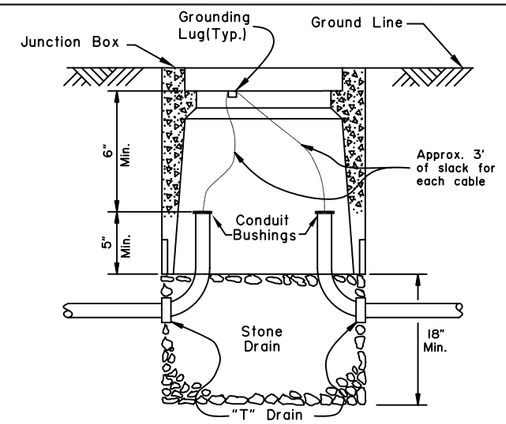

TYPE I & I-A JUNCTION BOX

	DIMENSIONS (IN.)	
	TYPE I	TYPE I-A
A	15	22 3/4
B	10	13 1/4
C	1 3/4	2
D	13 1/2	21 1/4
E	8 1/2	11 3/4
F	12	18
G	1 3/4	2
H	19 1/2	27 1/4
J	14 1/2	17 3/4
K	8 3/4	14 1/2

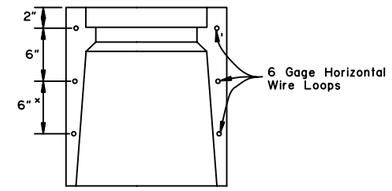

ALTERNATE REINFORCING

*Type I-A Only

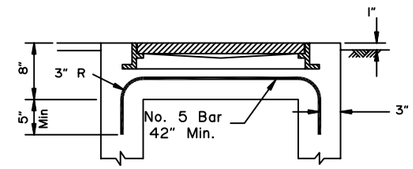

SECTION B-B

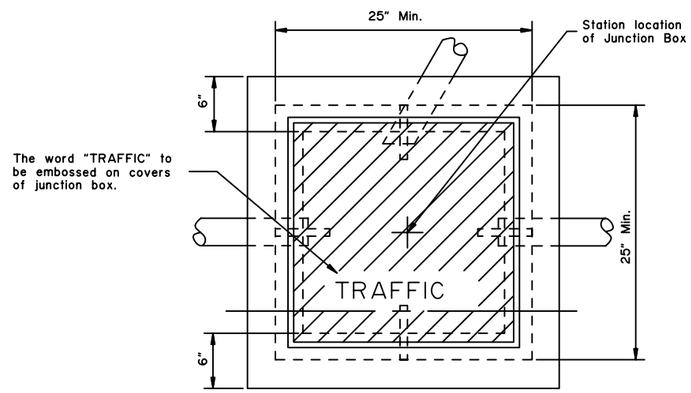

PLAN

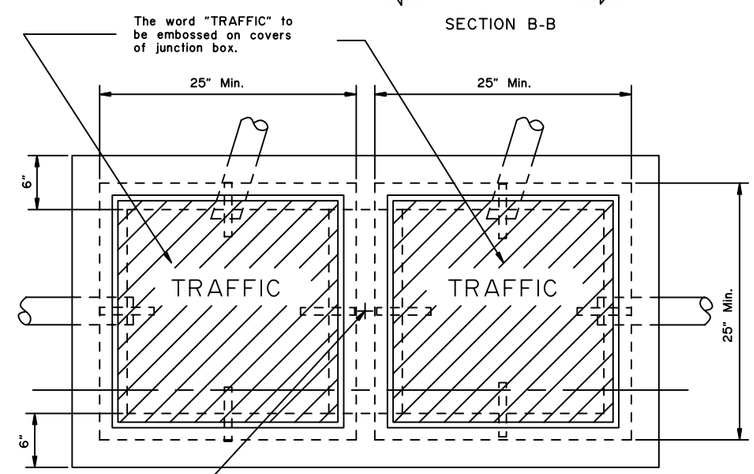

PLAN

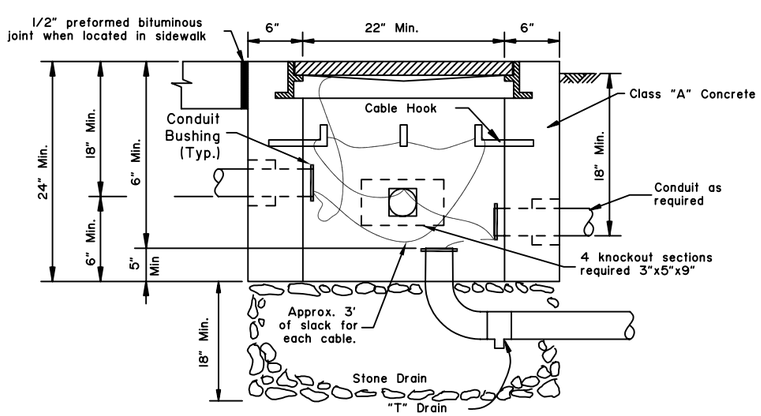

ELEVATION

TYPE II JUNCTION BOX

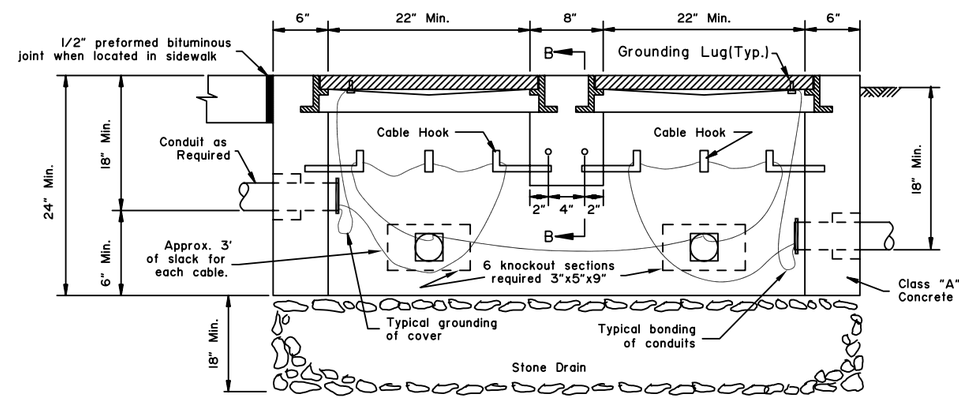

ELEVATION

TYPE III JUNCTION BOX

GENERAL NOTES:

1. Each frame and cover for Type II and Type III junction boxes shall be of cast iron for light duty use with a minimum weight of 210 pounds. Covers for type I & IA junction boxes shall be either aluminum or cast iron.
2. Junction boxes located in a sidewalk shall be installed with a 1/2" preformed bituminous joint material around its perimeter.
3. All conduits shall be bonded to form a continuous electrically secure system with the ground at the load center junction box.
4. All junction box covers shall be bonded to ground with copper braid of £8 AWG cross section. For types I & IA, the length shall be 3 feet, and 5 feet for types II & III.
5. All conduits shall be grouted in knockout sections in accordance with the Alaska Specifications for Highway Construction, latest edition.
6. Junction boxes shall be set flush with the surrounding surface except in an unpaved shoulder, when they shall be located 2" below grade.

REVISIONS		
Date	Description	By
4/1/93	Modify Type II & III	Gdo

State of Alaska
Department of Transportation
& Public Facilities

JUNCTION BOXES FOR TRAFFIC SIGNALS

APPROVED

B. C. Hanhart
EE-4600

Loren L. Rasmussen
CE-3395

Date 7/15/82

T-34.01