STATE OF ALASKA
DEPARTMENT OF NATURAL RESOURCES
DIVISION OF PARKS AND OUTDOOR RECREATION

DSP: BYERS LAKE BRIDGE REPLACEMENT REBID

PROJECT NO. 78050-3

Vicinity Map

SM, T31N, R04W, SECTION 30

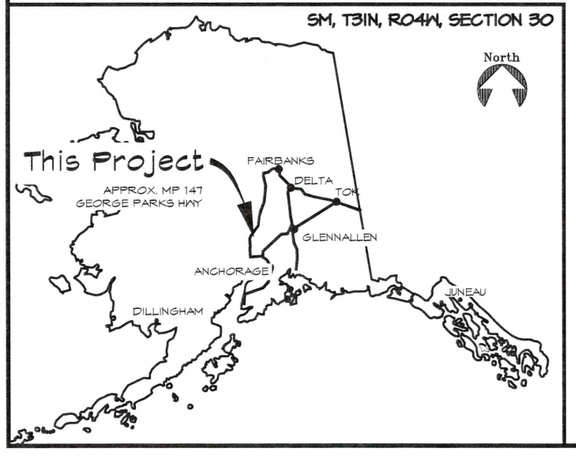

INDEX

1. TITLE SHEET
2. VICINITY MAP & ESTIMATE OF QUANTITIES
3. GENERAL LAYOUT
4. SITE
5. BRIDGE OVERVIEW
6. TYPICAL CABLE ANCHORAGE DETAILS
7. TYPICAL ABUTMENT DETAILS
8. TRUSS LAYOUT
9. TYPICAL TRUSS CHORD DETAILS
10. ALTERNATE - WELDED TRUSS CHORD DETAILS
11. TYPICAL CROSS BRACING DETAILS
12. WELDED ALTERNATIVE CROSS BRACING DETAILS
13. TYPICAL TRUSS FRAME DETAILS
14. END TRUSS FRAME AND MISCELLANEOUS FRAME DETAILS
15. WELDED ALTERNATIVE TRUSS FRAME DETAILS
16. CABLE SUPPORT TOWER DETAILS
17. ALTERNATIVE CABLE SUPPORT TOWER DETAILS
18. CABLE SADDLES OVERVIEW
19. CABLE SADDLES SOUTH TOWER SADDLE TOP
20. CABLE SADDLES SOUTH TOWER SADDLE MIDDLE
21. CABLE SADDLES SOUTH TOWER SADDLE BOTTOM
22. CABLE SADDLES NORTH TOWER SADDLE TOP
23. CABLE SADDLES NORTH TOWER SADDLE MIDDLE
24. CABLE SADDLES NORTH TOWER SADDLE BOTTOM
25. CAST CABLE SADDLES REQUIRED PROFILE
26. CABLE COMPONENT DETAILS
27. PEDESTRIAN RAILING
28. TEMPORARY CONFIGURATION NOTES

STATE OF ALASKA
Department of Natural Resources
Division of Parks & Outdoor Recreation

Recommended:

Rys Miranda — 25 Oct. 2016
Chief, Design and Construction — Date

Approved:

M. WEDELING — 10.26.16
Ben Ellis — Date
Director, Alaska State Parks

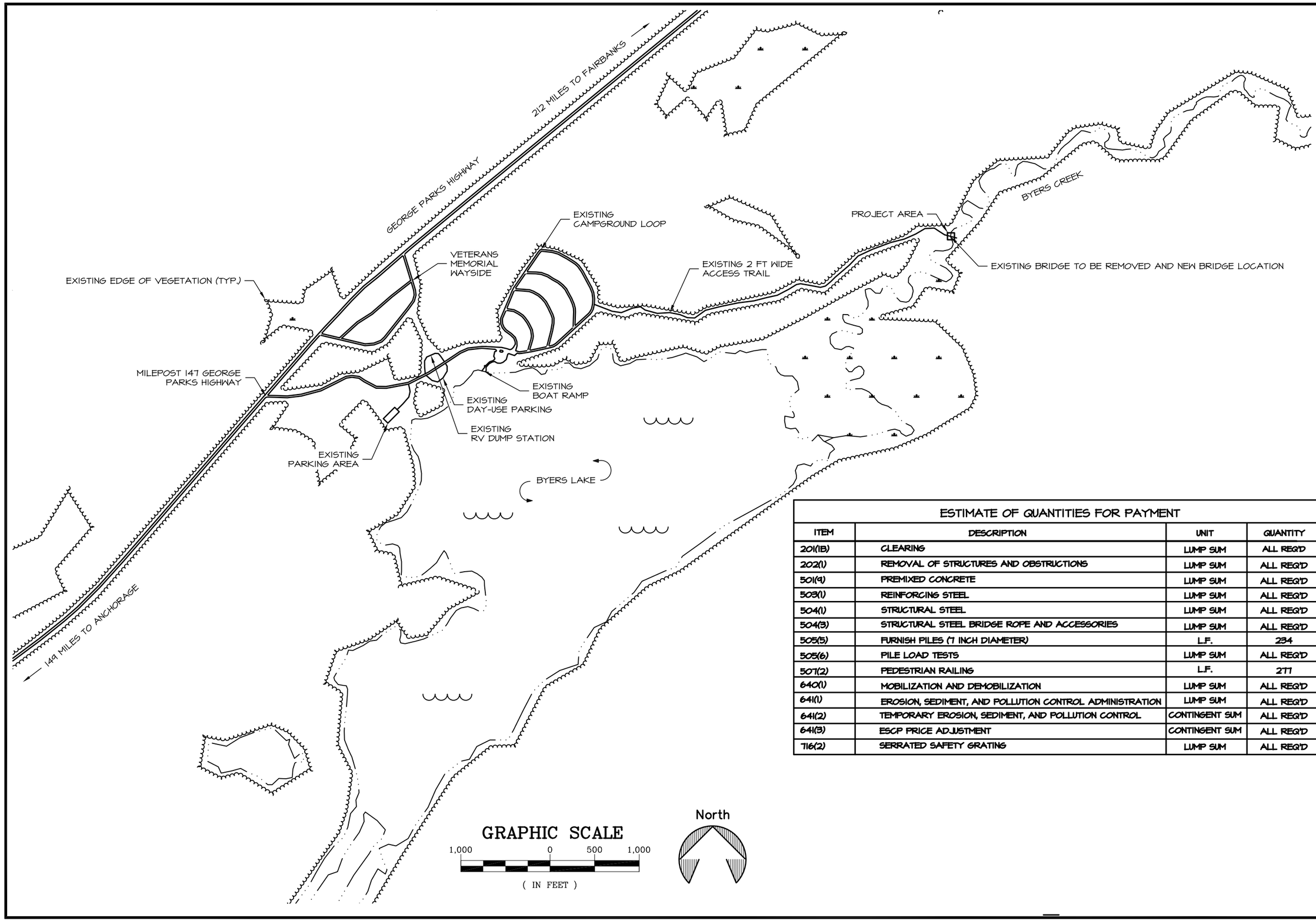

ESTIMATE OF QUANTITIES FOR PAYMENT

ITEM	DESCRIPTION	UNIT	QUANTITY
201(1B)	CLEARING	LUMP SUM	ALL REQ'D
202(1)	REMOVAL OF STRUCTURES AND OBSTRUCTIONS	LUMP SUM	ALL REQ'D
501(9)	PREMIXED CONCRETE	LUMP SUM	ALL REQ'D
503(1)	REINFORCING STEEL	LUMP SUM	ALL REQ'D
504(1)	STRUCTURAL STEEL	LUMP SUM	ALL REQ'D
504(3)	STRUCTURAL STEEL BRIDGE ROPE AND ACCESSORIES	LUMP SUM	ALL REQ'D
505(5)	FURNISH PILES (7 INCH DIAMETER)	L.F.	234
505(6)	PILE LOAD TESTS	LUMP SUM	ALL REQ'D
507(2)	PEDESTRIAN RAILING	L.F.	277
640(1)	MOBILIZATION AND DEMOBILIZATION	LUMP SUM	ALL REQ'D
641(1)	EROSION, SEDIMENT, AND POLLUTION CONTROL ADMINISTRATION	LUMP SUM	ALL REQ'D
641(2)	TEMPORARY EROSION, SEDIMENT, AND POLLUTION CONTROL	CONTINGENT SUM	ALL REQ'D
641(3)	ESCP PRICE ADJUSTMENT	CONTINGENT SUM	ALL REQ'D
716(2)	SERRATED SAFETY GRATING	LUMP SUM	ALL REQ'D

STATE OF ALASKA DEPARTMENT OF NATURAL RESOURCES

DSP: BYERS LAKE
BRIDGE REPLACEMENT REBID
PROJECT No. 78050-3

Vicinity Map & Estimate of Quantities

ALASKA STATE PARKS

PREPARED: RCS
DRAWN: RCS
REVIEWED: LMR
DATE: OCT. 2016

SHEET 02 OF 28 SHEETS

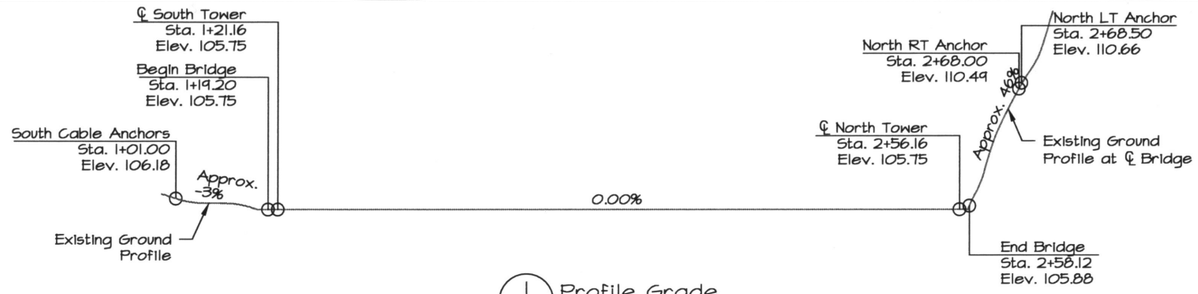

1 Profile Grade
No Scale

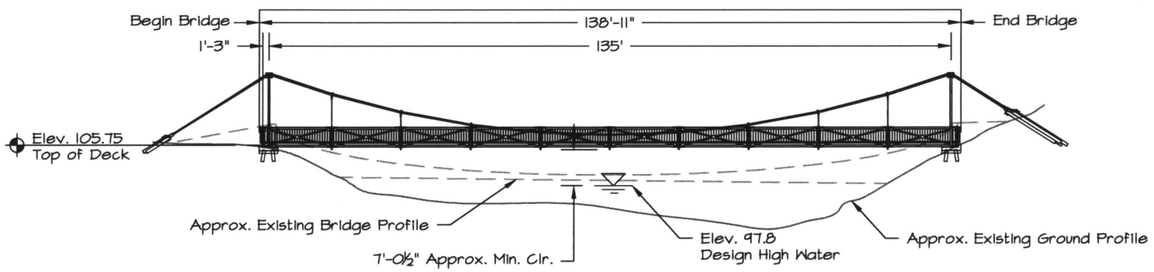

2 Bridge Profile
Scale: 1" = 30'

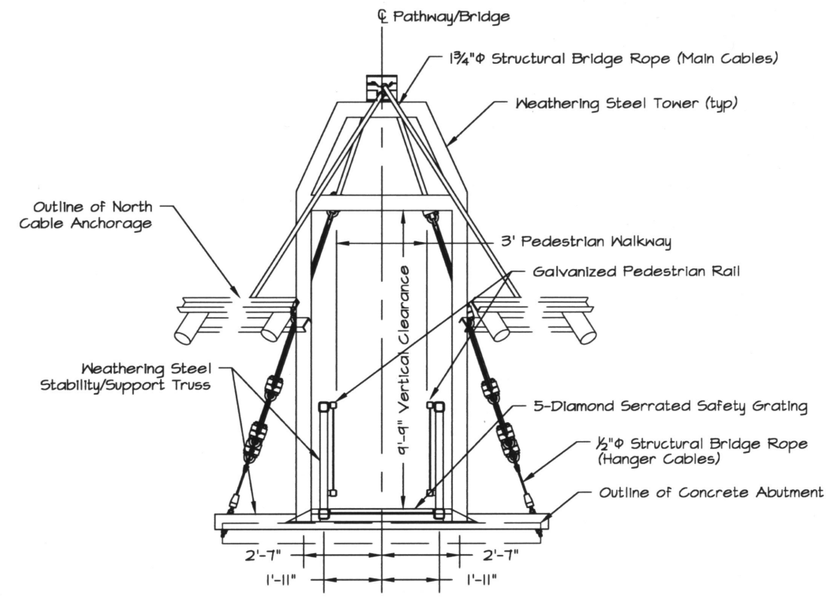

4 Typical Section
Scale: 1" = 5'-0"

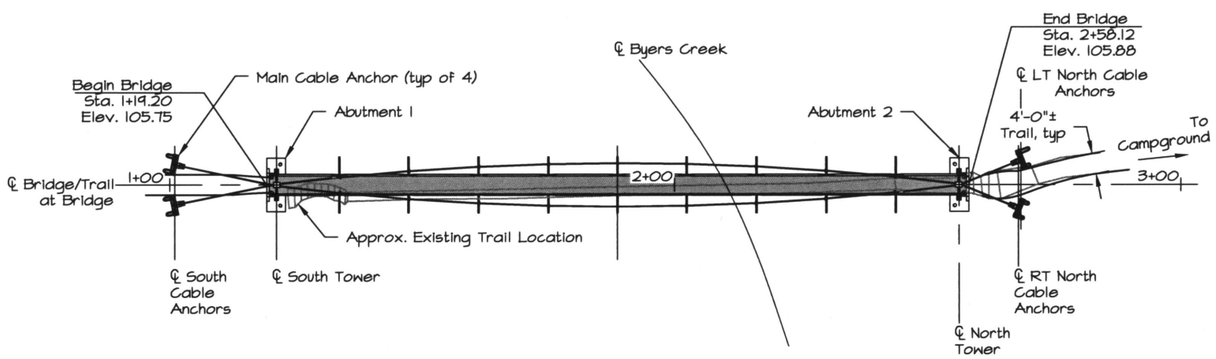

3 Bridge Plan
Scale: 1" = 30'

ESTIMATE OF BRIDGE QUANTITIES

ITEM	PAY UNIT	ESTIMATING UNIT	SUBST.	SUPERST.	TOTAL
NON-SHRINK GROUT (MICROPILES)	subsidiary	CY	5	-	5
PREMIXED CONCRETE (ABUTMENTS)	LS	CY	2	-	2
HOT-DIPPED GALVANIZED STEEL (CABLE ANCHORS)	LS	LBS.	-	18700	18700
1 ¾"Φ STRUCTURAL BRIDGE ROPE - GALVANIZED CLASS C	LS	LF	-	360	360
½"Φ STRUCTURAL BRIDGE ROPE - GALVANIZED CLASS C	LS	LF	-	100	100
FURNISH AND INSTALL BRIDGE ROPE SOCKETS AND CLAMPS	LS	LBS.	-	1400	1400
REINFORCING STEEL (not including micropile reinforcing steel)	LS	LBS.	600	-	600
PEDESTRIAN RAILING	LF	LF	-	277	277
FURNISH MICROPILE CASING 7"Φx0.500"	LF	LF	234	-	234
INSTALL MICROPILE 7"Φ	EA	EA	16	-	16
5-Diamond Serrated Safety Grating	LS	SF	-	470	470

QUANTITIES SHOWN ARE NOT NECESSARILY THE PAY QUANTITIES NOR THE TOTAL QUANTITY OF THE PARTICULAR ITEM.

STATE OF ALASKA
49 TH
Peter A. Giessel
2016-08-07
SE-13666
REGISTERED PROFESSIONAL ENGINEER

Do not scale any critical dimension. Use provided dimensions to derive. If a critical dimension is missing, request clarification from the Engineer of Record.

Plans Developed By:
Giessel Technical Services, Inc.
17450 N Juanita Lp, 99577
(907) 887-6356
AECC1412

STATE OF ALASKA DEPARTMENT OF NATURAL RESOURCES

BYERS LAKE
BYERS LAKE BRIDGE DESSIGN
PROJECT No. 78050-2

General Layout

ALASKA STATE PARKS

PREPARED: PAG
DRAWN: PAG
REVIEWED: XXX
DATE: 2016-08-07

SHEET 03 OF 28 SHEETS

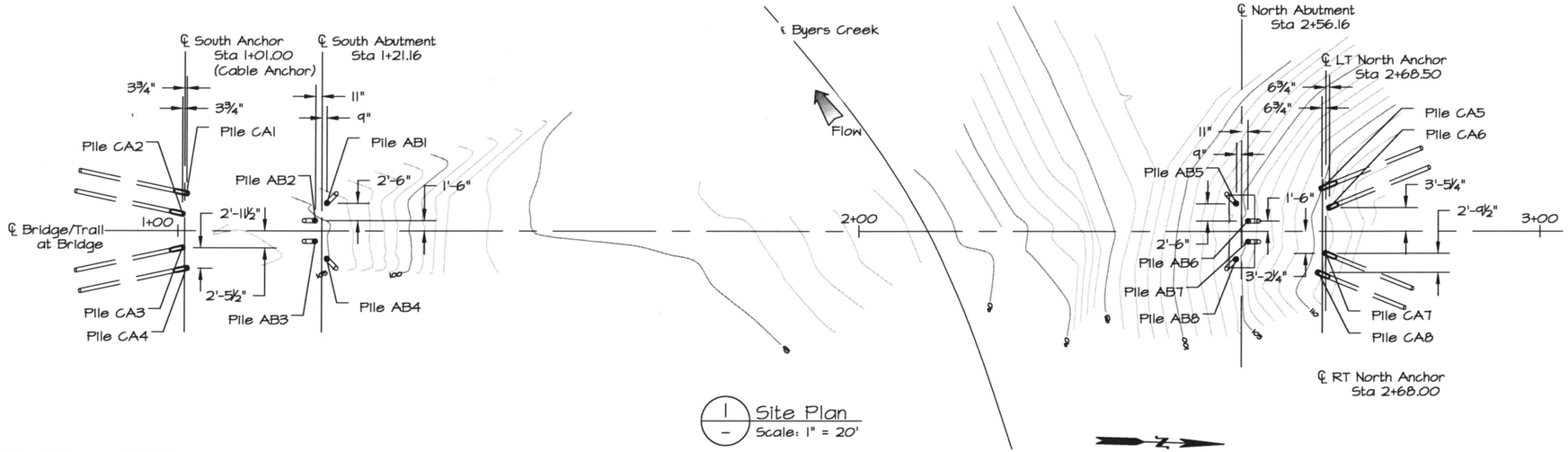

1 Site Plan
Scale: 1" = 20'

GENERAL NOTES

Design: ..... AASHTO LRFD Bridge Design Specifications, Seventh Edition, 2014, with no interim Specifications
AASHTO LRFD Guide Specifications for the Design of Pedestrian Bridges, Second Edition, 2009, with 2015 Interim Specifications
AASHTO Standard Specifications for Structural Supports for Highway Signs, Luminaires, and Traffic Signals, Sixth Edition, 2013, with 2015 Interim Specifications

Construction: ..... State of Alaska 2015 Standard Specifications for Highway Construction with Special Provisions

Dead Load: ..... Includes 4 psf for grating

Live Load: ..... 90 psf Pedestrian Live Load. No provisions for vehicular traffic provided. Geometery provides permanent physical barrier to motorized vehicles

Snow Load: ..... 157 psf Snow load is non-concurrent with pedestrian load.

Wind Load ..... 90 miles per hour in accordance with AASHTO Standard Specifications for Structural Supports for Highway Signs, Luminaires, and Traffic Signals

Seismic Parameters: ... Acceleration Coefficient, A_S=0.47g, PGA=0.446g, Site Coefficient=1.054 (Assume Site Class D), Liquifaction Potential=Low

Reinforcing Steel: ..... ASTM A706, Fy=60,000 psi

C.I.P. Concrete: ..... Use Prepackaged Concrete with a specified f'c=5000 psi minimum

Non-Shrink Grout: ..... ASTM C1107

Structural Steel: ..... Plates and Hot-Rolled Shapes: AASHTO M270 Grade 50 / ASTM A709 Grade 50 / fy = 50ksi meeting the low-temperature requirements
Hollow Structural Sections (Tube Steel): ASTM A500 Grade B or C / ASTM A501 Grade B / ASTM A618, CVN 25/20 ft-lbs @ +10°F
Pile Casing: Minimum Yield Strength = 50 ksi
Bolts: ASTM A325/A449, Type 3
Nuts: ASTM A563, Grade C3 or DH3
Washers: ASTM F436-3
Structural Bridge Rope: ASTM A603 Class A Coating
Weld Metal shall conform to the requirements of AASHTO/AWS D1.5 Bridge Welding Code, weld strength 70ksi minimum.

Break corners and edges noted with ⅛" radius fillet.

All steel including HSS: Low-temperature steel, Zone 3 fracture critical per ASTM A709.

Anchor Bolts: ..... Adhesive Anchor Bolts shall be ASTM A320 L7 Threaded Rods embeded 6" minimum. Install in accordance with ICC-ES report listed in the special provisions. Alternatively, headed ASTM A449 Anchor bolts, cast in place, embeded 6" minimum, may be substituted.

Coatings: ..... All steel to be Hot-Dipped Galvanized after fabrication. Provide any seal welding required for galvanization. Repair damaged coatings in accordance with ASTM A780.

Steel Bar Stock for Pedestrian Railing: ASTM A36

Expanded Polystyrene...Meet the requirements of ASTM C578 Type XII or Type X. The minimum compressive resistance shall not be greater than 15 psi.

Field verify critical elevations and ground profile prior to fabrication.

ABBREVIATIONS:

℄	=	Centerline
PL	=	Plate
&	=	And
@	=	At
Φ	=	Diameter
Approx.	=	Approximate
Abut.	=	Abutment
Bot.	=	Bottom
Br.	=	Bridge
Btwn.	=	Between
Brg.	=	Bearings
CBSI	=	Clodfelter Bridge and Structures, Inc.
C.I.P.	=	Cast-in-Place
CJP	=	Complete Joint Penetration
Clr.	=	Clear, Clearance
Csk.	=	Counter Sunk
D.S.	=	Downstream
Dia.	=	Diameter
Dtl.	=	Detail
Dwg.	=	Drawing
Elev.	=	Elevation
E.F.	=	Each Face
eq	=	equal
F.F.	=	Far Face
HDG	=	Hot-Dipped Galvanized
HSS	=	Hollow Structural Sections
I.D.	=	Inside Diameter
Jt.	=	Joint
kip	=	1000 pounds force
ksf	=	kips per square foot
Lat.	=	Lateral
LT	=	Left
max.	=	Maximum
min.	=	Minimum
n/a	=	Not Applicable
n.f.	=	Near Face
No.	=	Number
n/c	=	Not Calculated
OAE	=	Or Approved Equivalent
O.D.	=	Outside Diameter
o.c.	=	On Center
O.H.	=	Opposite Hand (mirrored)
O.H.W.	=	Ordinary High Water
PL	=	Plate
psf	=	pounds per square foot
psi	=	pounds per square inch
req.	=	required
R.O.W.	=	Right of Way
RT	=	Right
Sect.	=	Section
Sim.	=	Similar
Spc.	=	Space, Spaces
Std.	=	Standard
Symm.	=	Symmetric
typ	=	Typical
U.S.	=	Upstream
UT	=	Ultrasonic Testing
yr.	=	Year
w/	=	With
W.P.	=	Working Point

HYDRAULIC & HYDROLOGIC SUMMARY

Flood Frequency (yr.)	50	100	500
Exceedance Probability (%)	2	1	0.2
Design Discharge (ft /sec)	1780	2135	3120
Design High Water (ft)	97.33	97.80	98.94
Anticipated Additional Backwater (ft)	0	0	
Contraction Scour (ft)		0	0
Abutment Scour (ft)		0	0

PILE DATA

LOCATION	STATION	OFFSET	ANGLE IN PLAN	CASED LENGTH, ft.	BOND LENGTH, ft.	RUN IN HORIZONTAL AXIS	FALL IN VERITCAL	FACTORED LOAD, kips	FACTORED CAPACITY, kips	Φ Factor
Pile AB1	1+21.91	4.00' LT	45°	11	5	2	12	33	54	0.55
Pile AB2	1+20.24	1.50' LT	180°	10	5	2	12	44	54	0.55
Pile AB3	1+20.24	1.50' RT	180°	10	5	2	12	44	54	0.55
Pile AB4	1+21.91	4.00' RT	315°	11	5	2	12	33	54	0.55
Pile AB5	2+55.41	4.00' LT	135°	12	5	2	12	33	54	0.55
Pile AB6	2+57.08	1.50' LT	0°	10	5	2	12	44	54	0.55
Pile AB7	2+57.08	1.50' RT	0°	10	5	2	12	44	54	0.55
Pile AB8	2+55.41	4.00' RT	225°	12	5	2	12	33	54	0.55
Pile CA1	1+01.31	5.42' LT	168°	19	4	12	7.5	-33	44	0.55
Pile CA2	1+00.69	2.46' LT	168°	19	4	12	7.5	-33	44	0.55
Pile CA3	1+00.69	2.46' RT	192°	19	4	12	7.5	-33	44	0.55
Pile CA4	1+01.31	5.42' RT	192°	19	4	12	7.5	-33	44	0.55
Pile CA5	2+67.94	6.23' LT	22°	18	4	12	7	-33	44	0.55
Pile CA6	2+69.06	3.44' LT	22°	18	4	12	7	-33	44	0.55
Pile CA7	2+68.56	3.19' RT	338°	16	4	12	7	-33	44	0.55
Pile CA8	2+67.44	5.98' RT	338°	16	4	12	7	-33	44	0.55

NOTE: Loads given as Positive (+) are in Compression while Negative (-) are in Tension. Capacities are the same in both Tension and Compression.

All Micropiles are 7" O.D. with ½" wall thickness steel casing extending as shown above. If bedrock is encountered prior to cased length, cased length may be reduced to the length to bedrock. All Micropiles are to be Type B (pressure grouted). Include (1) #9 rebar centered in the Micropile to within a foot of the bottom of the Micropile. Provide chairs or saddles as necessary to center the rebar.

Pile Data is based on the Foundation Report "Revised Geotechnical Report For Byers Lake Bridge Design, Mile 147 Parks Highway, Alaska" by HDL Engineering Consultants, Dated August 3, 2016.

ANGLE IN PLAN:

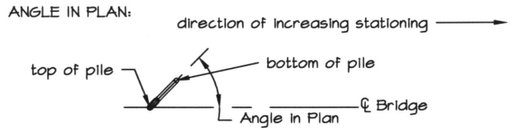

BATTER FROM VERTICAL:

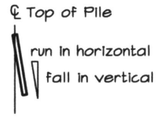

Do not scale any critical dimension. Use provided dimensions to derive. If a critical dimension is missing, request clarification from the Engineer of Record.

STATE OF ALASKA
49 TH
Peter A. Giessel
2016-08-08
SE-13666
REGISTERED PROFESSIONAL ENGINEER

Plans Developed By:
Giessel Technical Services, Inc.
17450 N Juanita Lp, 99577
(907) 887-6356
AECC1412

STATE OF ALASKA DEPARTMENT OF NATURAL RESOURCES

BYERS LAKE
BYERS LAKE BRIDGE DESIGN
PROJECT No. 78050-2

Site

ALASKA STATE PARKS

PREPARED: PAG
DRAWN: PAG
REVIEWED: XXX
DATE: 2016-08-07

SHEET 04 OF 28 SHEETS

Note: Left Cable Profile anchors left of ℄. Between towers, Left Cable Profile is to the Right of ℄. Similarly Right Cable Profile anchors right of ℄ on both ends, but is Left of ℄ between towers.

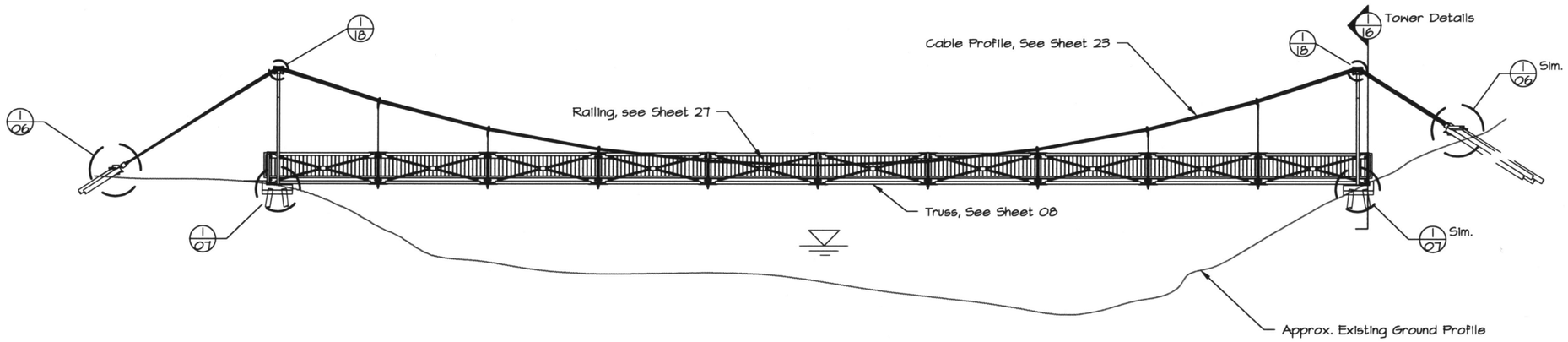

1/– Structural Profile
Scale: No Scale

Do not scale any critical dimension. Use provided dimensions to derive. If a critical dimension is missing, request clarification from the Engineer of Record.

STATE OF ALASKA
49 TH
Peter A. Giessel
2016-08-07
SE-13666
REGISTERED PROFESSIONAL ENGINEER

Plans Developed By:
Giessel Technical Services, Inc.
17450 N Juanita Lp, 99577
(907) 887-6356
AECC1412

STATE OF ALASKA DEPARTMENT OF NATURAL RESOURCES

BYERS LAKE
BYERS LAKE BRIDGE DESIGN
PROJECT No. 78050-2

Bridge Overview

ALASKA STATE PARKS

PREPARED: PAG
DRAWN: PAG
REVIEWED: XXX
DATE: 2016-08-07

SHEET 05 OF 28 SHEETS

Note: South Anchor shown, North Anchor Sim. O.H. @ Sim.

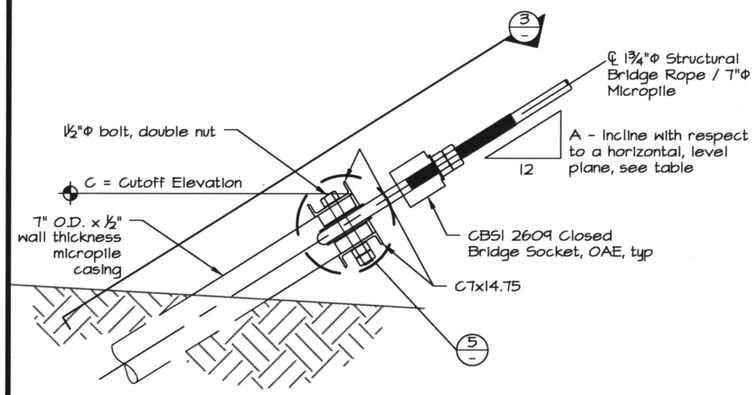

1 / 05 Anchor Profile
Scale: ½" = 1'-0"

Note: South Anchor shown, North Anchor Sim. O.H. @ Sim.

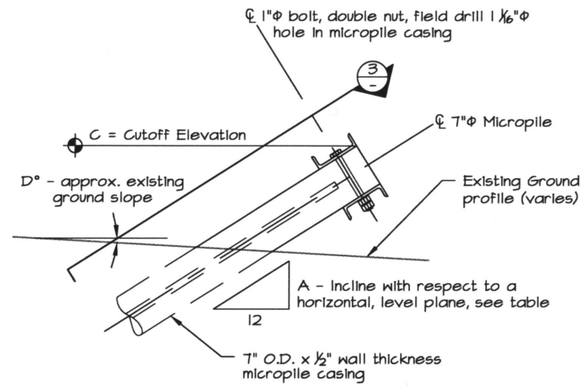

2 / - Micropile Profile
Scale: ½" = 1'-0"

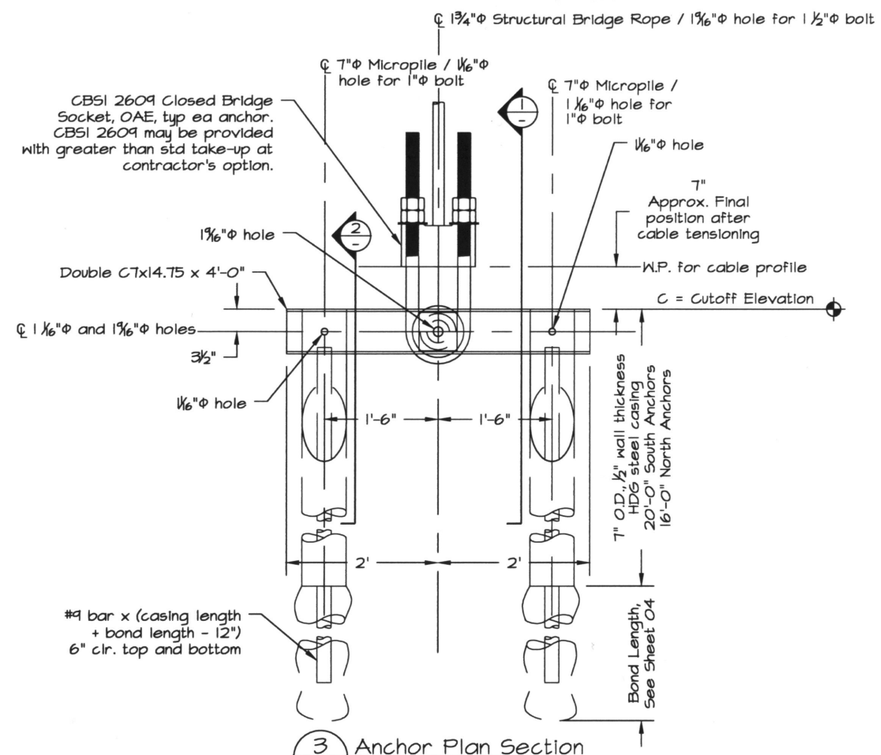

3 / - Anchor Plan Section
Scale: ½" = 1'-0"

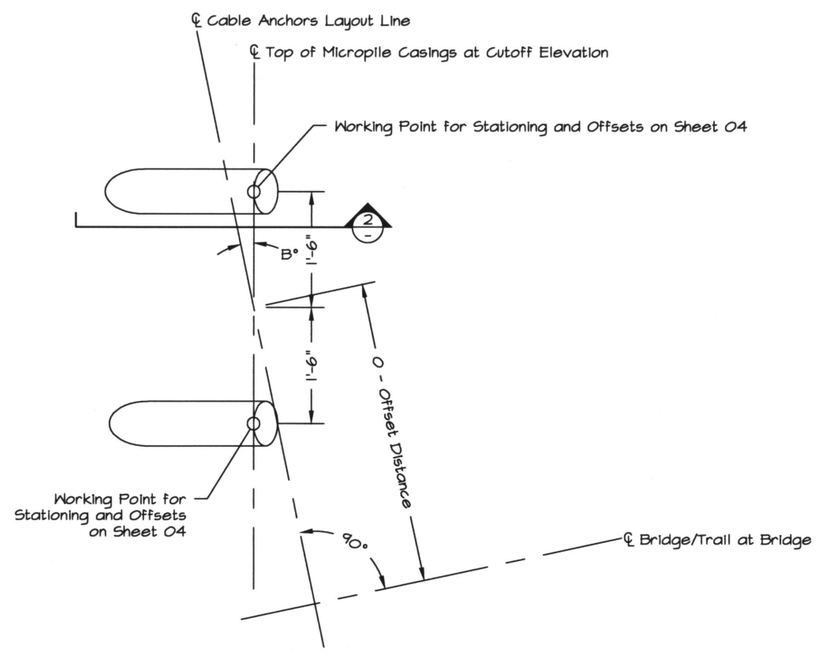

4 / - Anchor Layout
Scale: ½" = 1'-0"

Anchor Angle per Location

	A = Incline	B = Plan Angle	C = Cutoff Elevation (ft)	D = Ground Slope	O = Offset
South Anchor Left	7.5	12	107.5	3	3'-11 ¼" LT
South Anchor Right	7.5	-12	107.5	3	3'-11 ¼" RT
North Anchor Left	7	22	112.5	26	4'-10" LT
North Anchor Right	7	-22	112.5	20	4'-7" RT

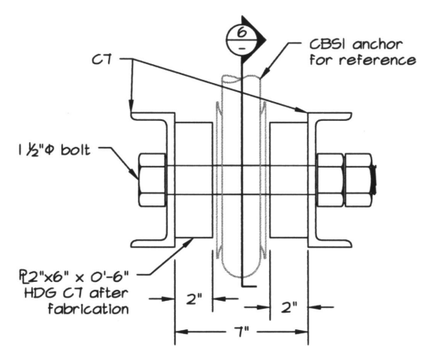

5 / - C7 Stiffener/Spacer Detail
Scale: 1 ½" = 1'-0"

Note: hole in C7 (not PL2") may be oversize up to 1 13/16"Φ to allow seal welding C7 to PL2" for HDG if desired.

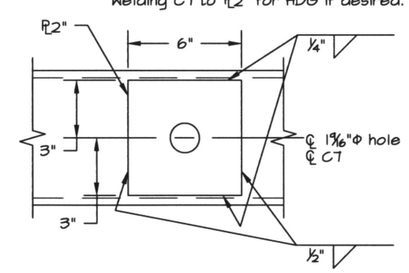

6 / - C7 Stiffener/Spacer Detail
Scale: 1 ½" = 1'-0"

Do not scale any critical dimension. Use provided dimensions to derive. If a critical dimension is missing, request clarification from the Engineer of Record.

STATE OF ALASKA 49 TH
Peter A. Giessel
2016-08-07
SE-13666
REGISTERED PROFESSIONAL ENGINEER

Plans Developed By:
Giessel Technical Services, Inc.
17450 N Juanita Lp, 99577
(907) 887-6356
AECC1412

STATE OF ALASKA DEPARTMENT OF NATURAL RESOURCES

BYERS LAKE
BYERS LAKE BRIDGE DESIGN
PROJECT No. 78050-2

Typical Cable Anchorage Details

ALASKA STATE PARKS

PREPARED: PAG
DRAWN: PAG
REVIEWED: XXX
DATE: 2016-08-07

SHEET 06 OF 28 SHEETS

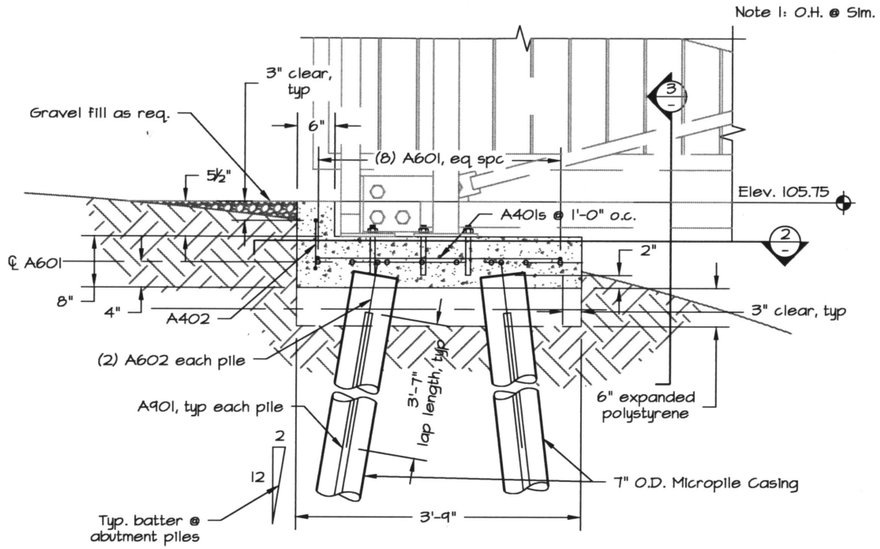

1/05 Abutment Profile
Scale: ½" = 1'-0"

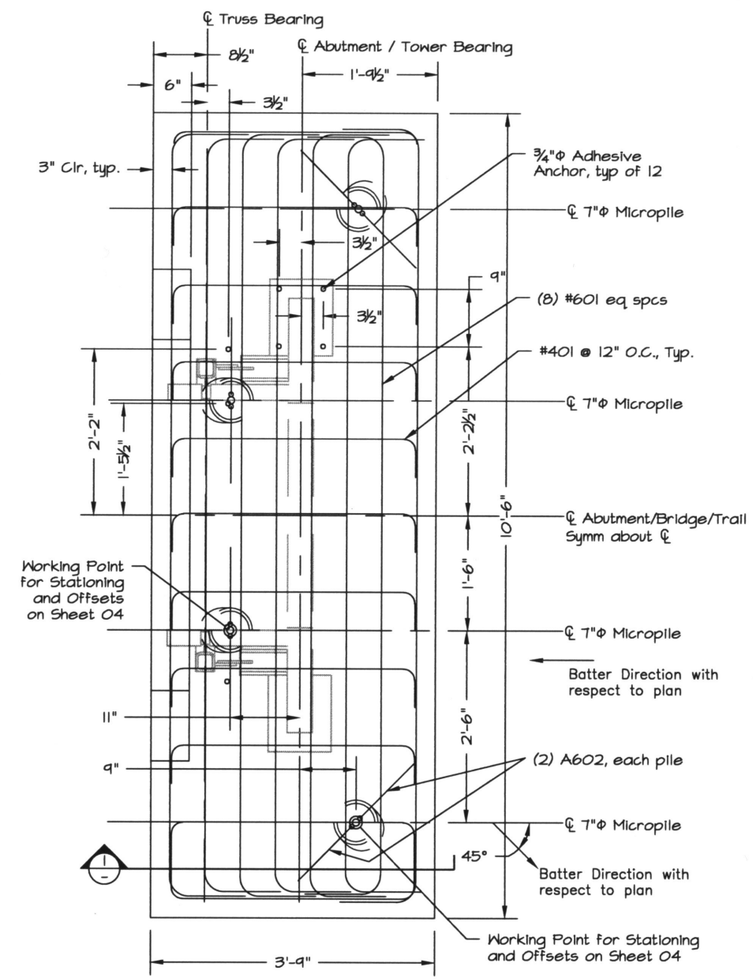

2/- Abutment Plan View
Scale: ½" = 1'-0"

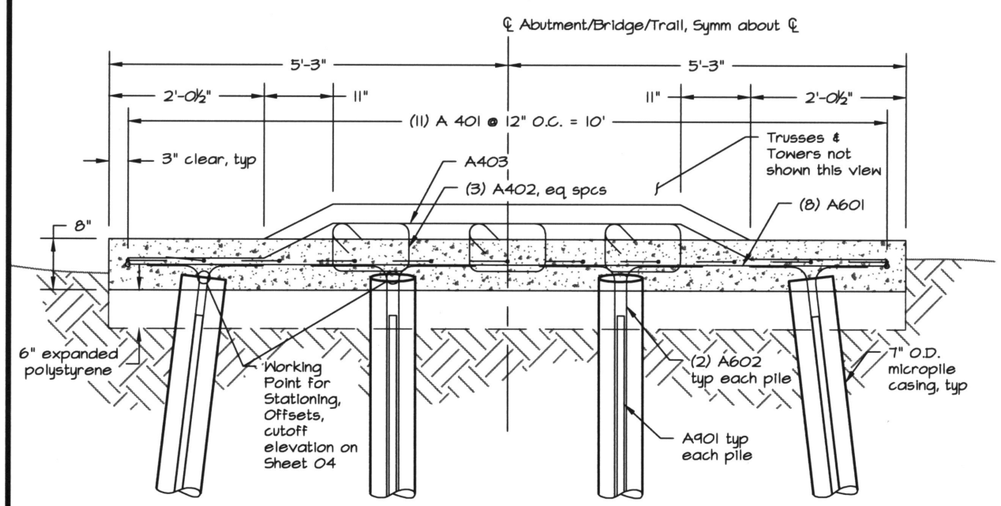

3/- Abutment Section
Scale: ½" = 1'-0"

REINFORCING STEEL - ONE ABUTMENT

MARK	SIZE	NO.	LENGTH	TYPE
A401	4	11	4'-7"	Bent
A402	4	3	4'-0"	Bent
A403	4	1	10'-3"	Bent
A601	6	8	12'-0"	Bent
A602	6	8	5'-6"	Bent
A901	9	4	Varies - B	-

BENDING DIAGRAM

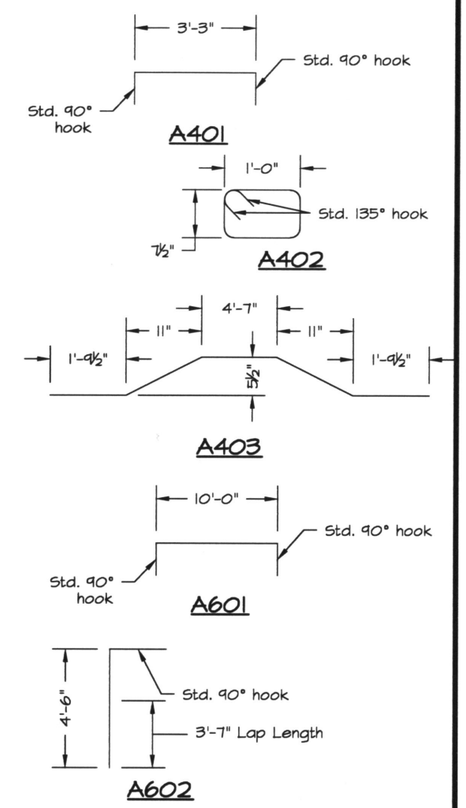

A. Length does not include length of lap splices. Minimum lap length for #4 bar is 1'-10". Minimum lap length for #6 bar is 3'-7". Minimize number of splices required to the maximum extent possible.
B. 12" less than the depth of the Microplie. See Sheet 04.

STATE OF ALASKA
49 TH
Peter A. Giessel
2016-08-07
SE-13666
REGISTERED PROFESSIONAL ENGINEER

Do not scale any critical dimension. Use provided dimensions to derive. If a critical dimension is missing, request clarification from the Engineer of Record.

Plans Developed By:
Giessel Technical Services, Inc.
17450 N Juanita Lp, 99577
(907) 887-6356
AECC1412

STATE OF ALASKA DEPARTMENT OF NATURAL RESOURCES

BYERS LAKE
BYERS LAKE BRIDGE DESSIGN
PROJECT No. 78050-2

Typical Abutment Details

ALASKA STATE PARKS

PREPARED: PAG
DRAWN: PAG
REVIEWED: XXX
DATE: 2016-08-07

SHEET 07 OF 28 SHEETS

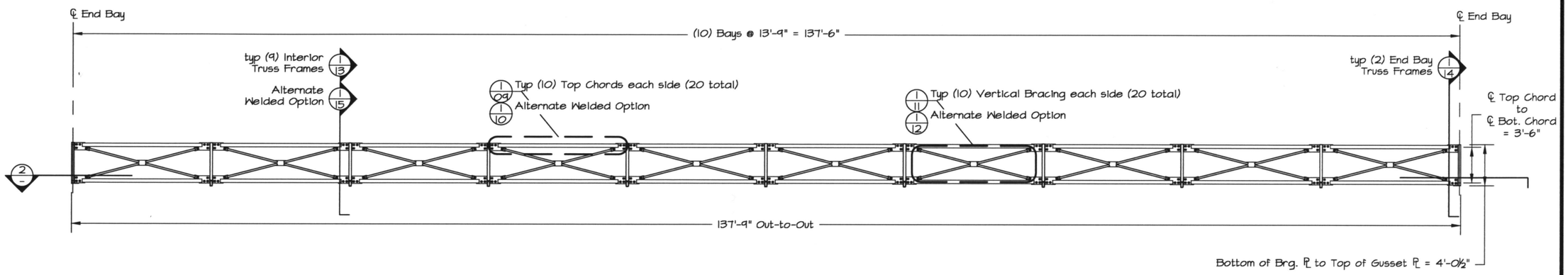

NOTE: At each connection, either the bolted connection or the welded alternative may be used. For example, on one side of an interior frame, bolted connections may be used, while on the other side of an interior frame, welded connections may be used. Contractor and Fabricator to determine which connections shall be field bolted and which connections are to be shop welded. Submit shop drawings for approval.

1/05 Truss Profile
Scale: 3/32" = 1'-0"

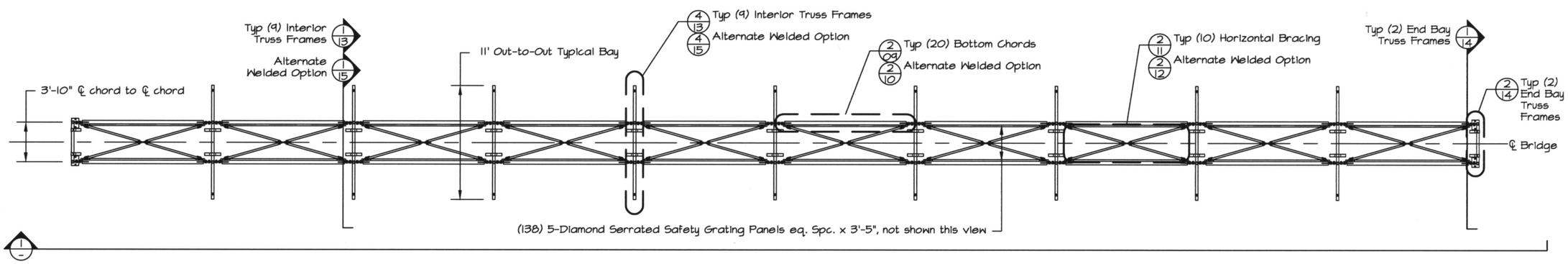

2/- Truss Bottom Plan
Scale: 3/32" = 1'-0"

Do not scale any critical dimension. Use provided dimensions to derive. If a critical dimension is missing, request clarification from the Engineer of Record.

STATE OF ALASKA
49 TH
Peter A. Giessel
2016-08-07
SE-13666
REGISTERED PROFESSIONAL ENGINEER

Plans Developed By:
Giessel Technical Services, Inc.
17450 N Juanita Lp, 99577
(907) 887-6356
AECC1412

STATE OF ALASKA DEPARTMENT OF NATURAL RESOURCES

BYERS LAKE
BYERS LAKE BRIDGE DESSIGN
PROJECT No. 78050-2

Truss Layout

ALASKA STATE PARKS

PREPARED: PAG
DRAWN: PAG
REVIEWED: XXX
DATE: 2016-08-07

SHEET 08 OF 28 SHEETS

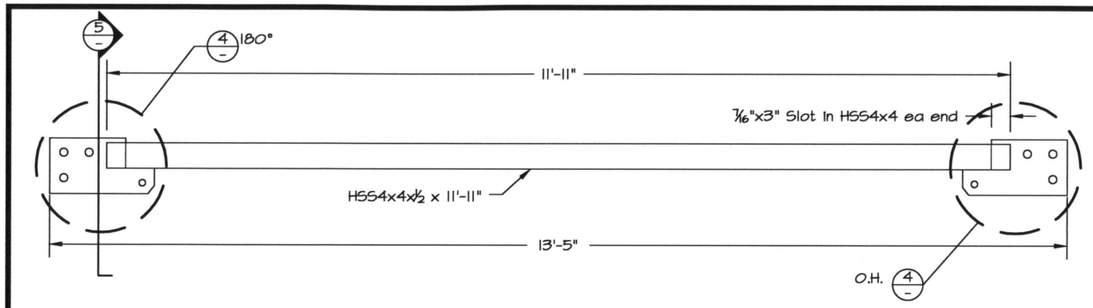

1/08 Typical Top Chord
Scale: 1/2" = 1'-0"

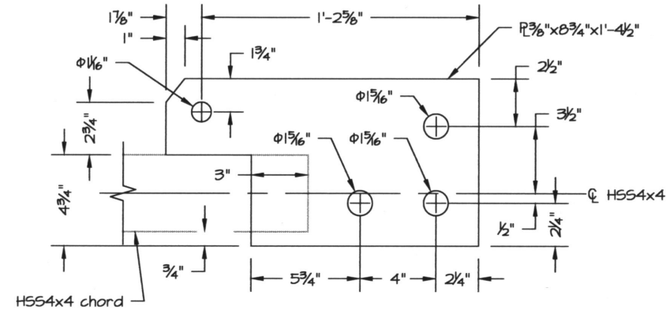

4/- Truss Chord Gusset Detail
Scale: 1 1/2" = 1'-0"

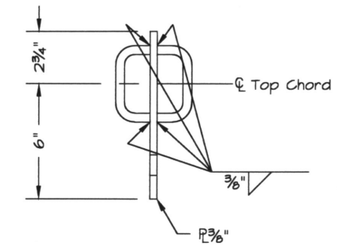

5/- Top Chord Section
Scale: 1 1/2" = 1'-0"

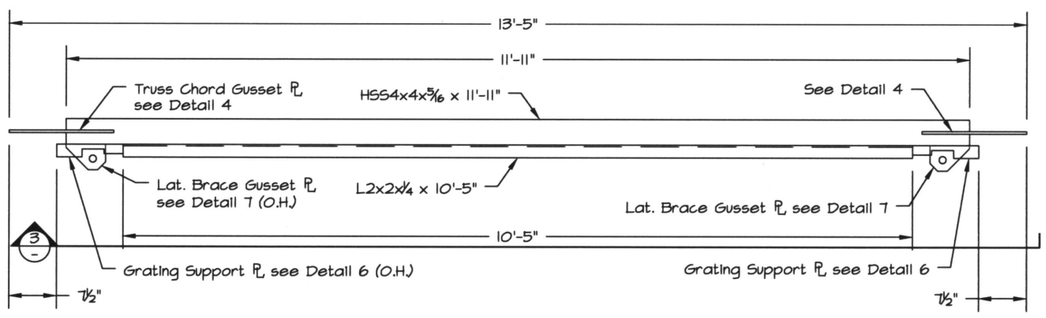

2/08 Typical Bot. Chord Top View
Scale: 1/2" = 1'-0"

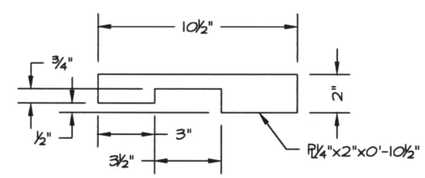

6/- Grating Support PL Detail
Scale: 1 1/2" = 1'-0"

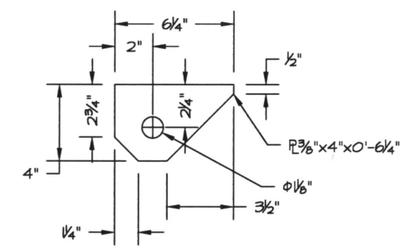

7/- Lat. Brace Gusset Detail
Scale: 1 1/2" = 1'-0"

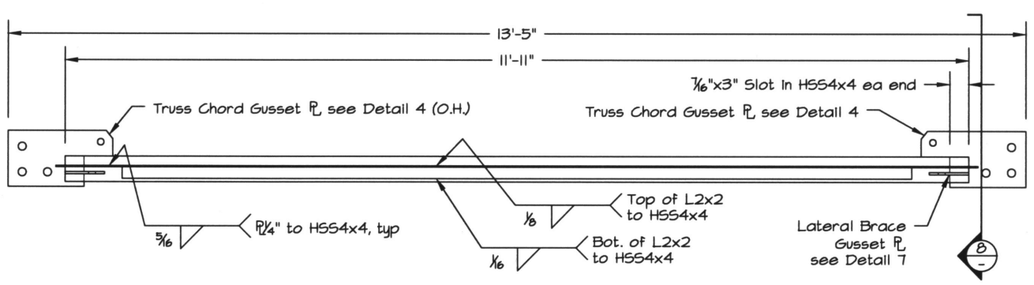

3/- Typical Bot. Chord Inside View
Scale: 1/2" = 1'-0"

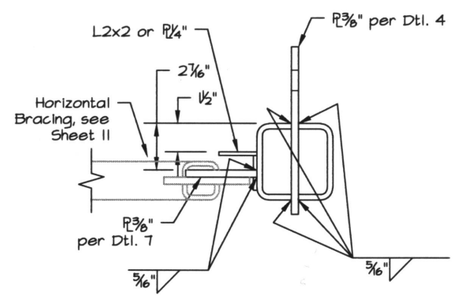

8/- Bot. Chord Section
Scale: 1 1/2" = 1'-0"

STATE OF ALASKA
49 TH
Peter A. Giessel
2016-08-07
SE-13666
REGISTERED PROFESSIONAL ENGINEER

Do not scale any critical dimension. Use provided dimensions to derive. If a critical dimension is missing, request clarification from the Engineer of Record.

Plans Developed By:
Giessel Technical Services, Inc.
17450 N Juanita Lp, 99577
(907) 887-6356
AECC1412

STATE OF ALASKA DEPARTMENT OF NATURAL RESOURCES

BYERS LAKE
BYERS LAKE BRIDGE DESSIGN
PROJECT No. 78050-2

Typical Truss Chord Details

ALASKA STATE PARKS

PREPARED: PAG
DRAWN: PAG
REVIEWED: XXX
DATE: 2016-08-07

SHEET 09 OF 28 SHEETS

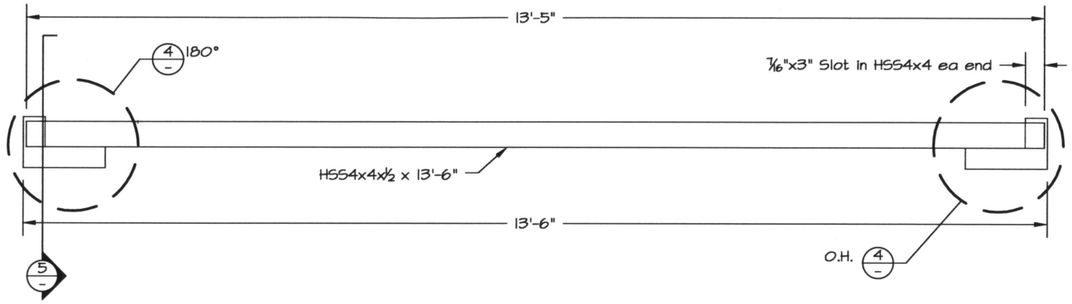

1 / 08 Welded Alt. Top Chord
Scale: 1/2" = 1'-0"

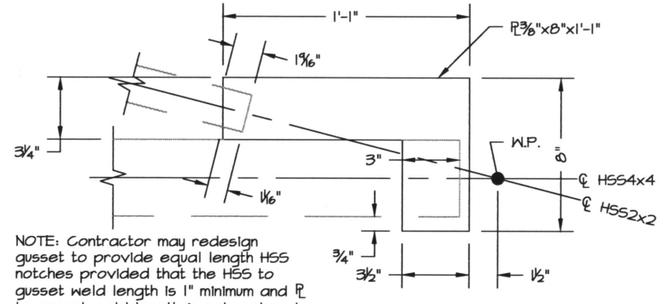

NOTE: Contractor may redesign gusset to provide equal length HSS notches provided that the HSS to gusset weld length is 1" minimum and PL to gusset weld length is not reduced.

4 / – Welded Alt. Truss Chord Gusset Detail
Scale: 1 1/2" = 1'-0"

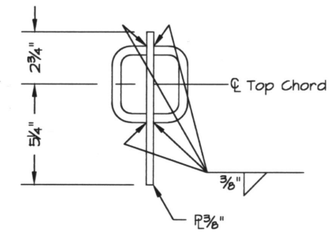

5 / – Top Chord Section
Scale: 1 1/2" = 1'-0"

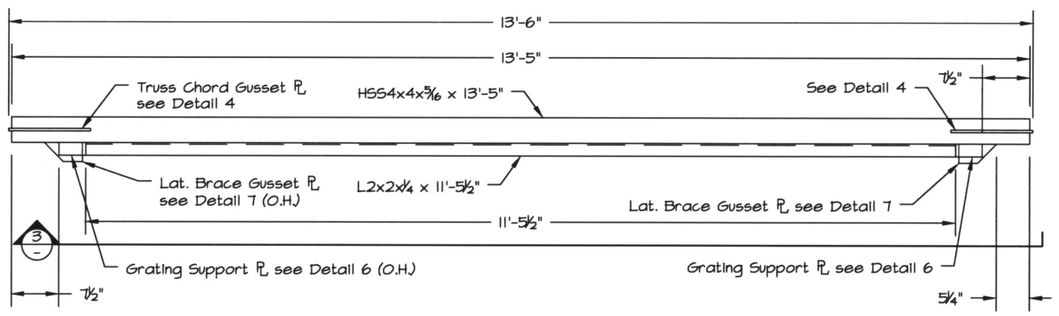

2 / 08 Welded Alt. Bot. Chord Top View
Scale: 1/2" = 1'-0"

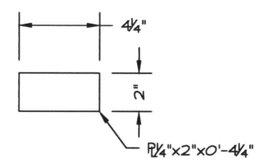

6 / – Grating Support PL Detail
Scale: 1 1/2" = 1'-0"

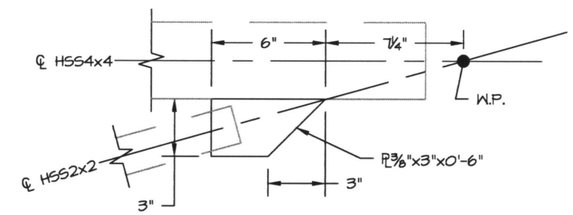

NOTE: Contractor may redesign gusset to provide equal length HSS notches provided that the HSS to gusset weld length is 1" minimum and PL to gusset weld length is not reduced.

7 / – Lat. Brace Gusset Detail
Scale: 1 1/2" = 1'-0"

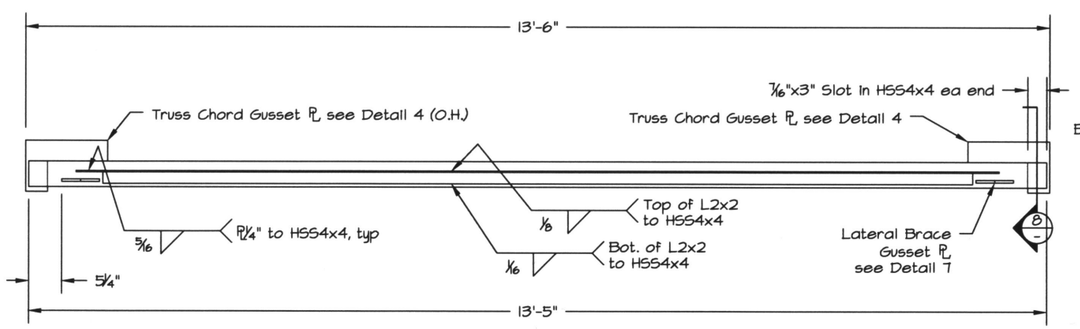

3 / – Welded Alt. Bot. Chord Inside View
Scale: 1/2" = 1'-0"

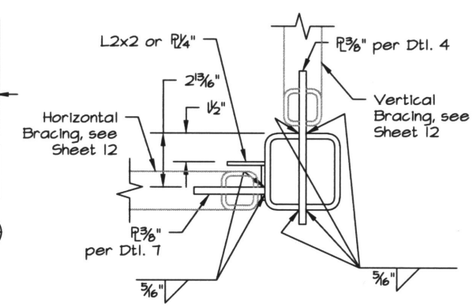

8 / – Bot. Chord Section
Scale: 1 1/2" = 1'-0"

STATE OF ALASKA DEPARTMENT OF NATURAL RESOURCES

Alternate - Welded Truss Chord Details

BYERS LAKE
BYERS LAKE BRIDGE DESIGN
PROJECT No. 78050-2

STATE OF ALASKA 49TH
Peter A. Giessel
2016-08-07
SE-13666
REGISTERED PROFESSIONAL ENGINEER

PREPARED: PAG
DRAWN: PAG
REVIEWED: XXX
DATE: 2016-08-07

SHEET 10 OF 28 SHEETS

Do not scale any critical dimension. Use provided dimensions to derive. If a critical dimension is missing, request clarification from the Engineer of Record.

Plans Developed By:
Giessel Technical Services, Inc.
17450 N Juanita Lp, 99577
(907) 887-6356
AECC1412

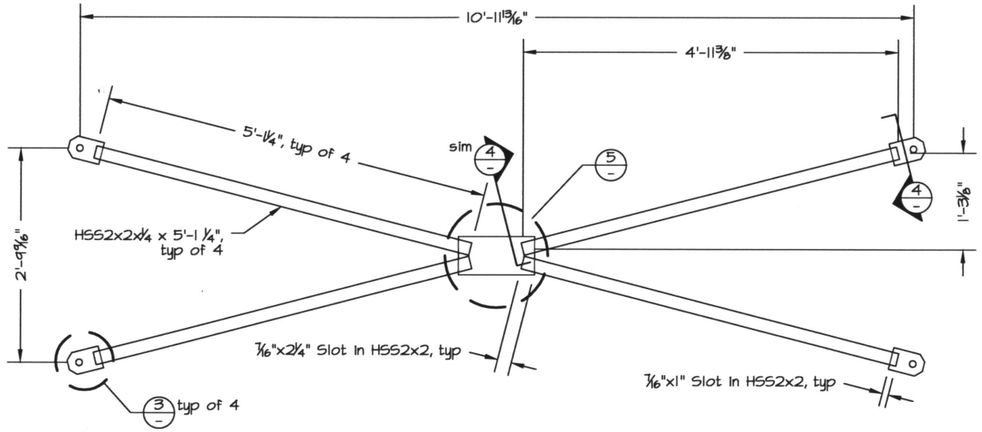

1 / 08 Typical Vertical Bracing
Scale: 1/2" = 1'-0"

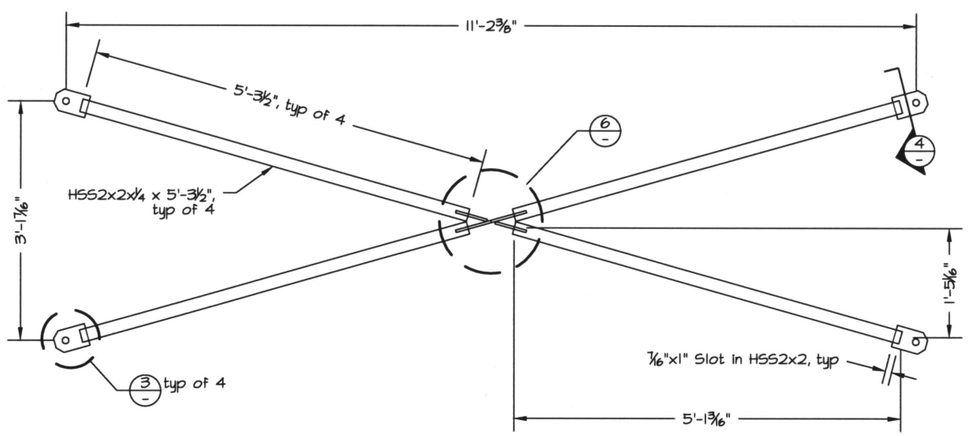

2 / 08 Typical Horizontal Bracing
Scale: 1/2" = 1'-0"

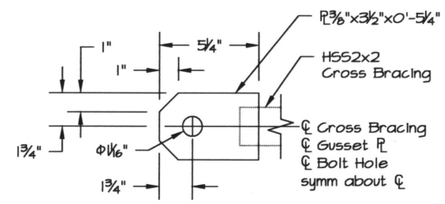

3 / - Cross Bracing Gusset PL
Scale: 1 1/2" = 1'-0"

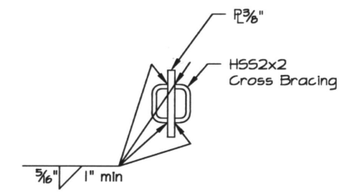

4 / - Cross Bracing Section
Scale: 1 1/2" = 1'-0"

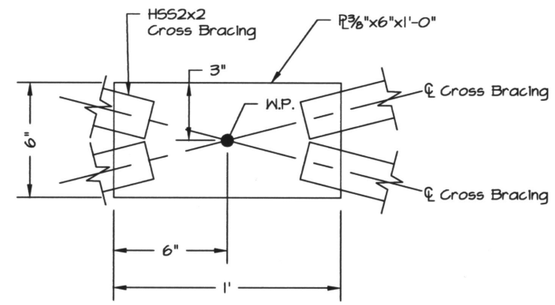

5 / - Cross Bracing Center PL
Scale: 1 1/2" = 1'-0"

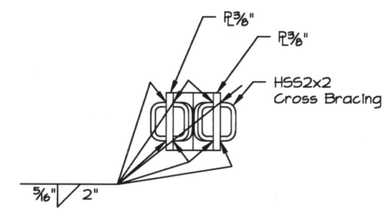

7 / - Cross Bracing Section
Scale: 1 1/2" = 1'-0"

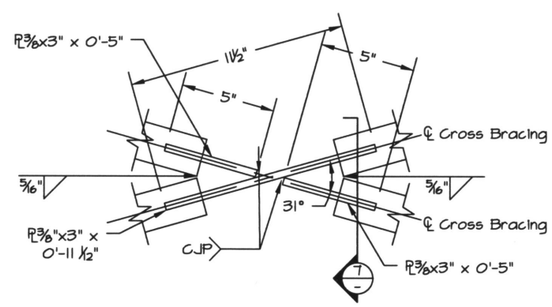

6 / - Horizontal Bracing Connection
Scale: 1 1/2" = 1'-0"

STATE OF ALASKA
49 TH
Peter A. Giessel
2016-08-07
SE-13666
REGISTERED PROFESSIONAL ENGINEER

Do not scale any critical dimension. Use provided dimensions to derive. If a critical dimension is missing, request clarification from the Engineer of Record.

Plans Developed By:
Giessel Technical Services, Inc.
17450 N Juanita Lp, 99577
(907) 887-6356
AECC1412

STATE OF ALASKA DEPARTMENT OF NATURAL RESOURCES

BYERS LAKE
BYERS LAKE BRIDGE DESIGN
PROJECT No. 78050-2

Typical Cross Bracing Details

ALASKA STATE PARKS

PREPARED: PAG
DRAWN: PAG
REVIEWED: XXX
DATE: 2016-08-07

SHEET
OF 28 SHEETS

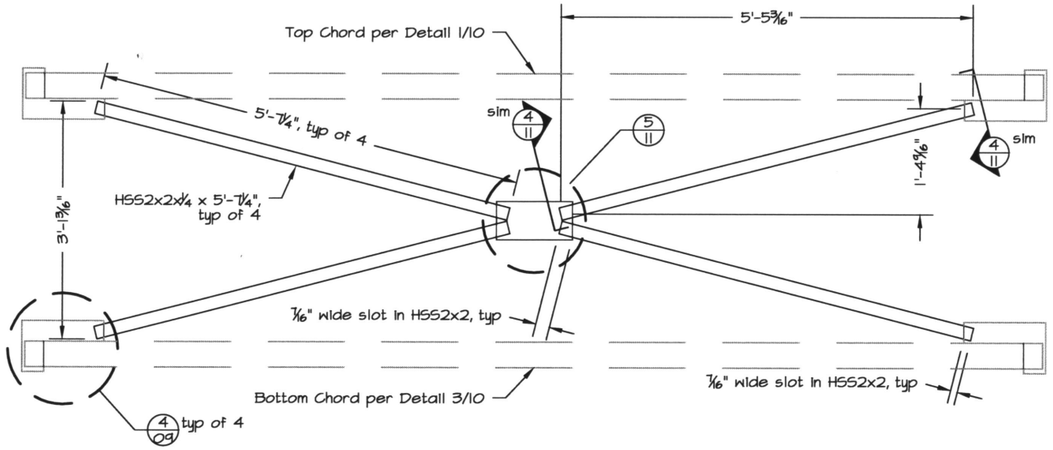

1/08 Welded Alt. Vertical Bracing
Scale: 1/2" = 1'-0"

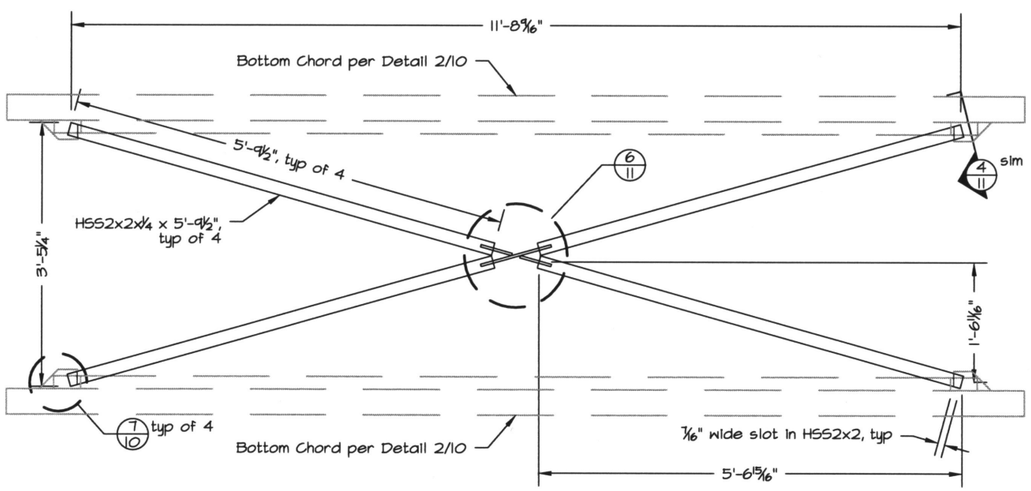

2/08 Welded Alt. Horizontal Bracing
Scale: 1/2" = 1'-0"

STATE OF ALASKA DEPARTMENT OF NATURAL RESOURCES

BYERS LAKE
BYERS LAKE BRIDGE DESIGN
PROJECT No. 78050-2

Welded Alternative Cross Bracing Details

STATE OF ALASKA 49TH
Peter A. Giessel
2016-08-07
SE-13666
REGISTERED PROFESSIONAL ENGINEER

PREPARED: PAG
DRAWN: PAG
REVIEWED: XXX
DATE: 2016-08-07

SHEET 12 OF 28 SHEETS

Do not scale any critical dimension. Use provided dimensions to derive. If a critical dimension is missing, request clarification from the Engineer of Record.

Plans Developed By:
Giessel Technical Services, Inc.
17450 N Juanita Lp, 99577
(907) 887-6356
AECC1412

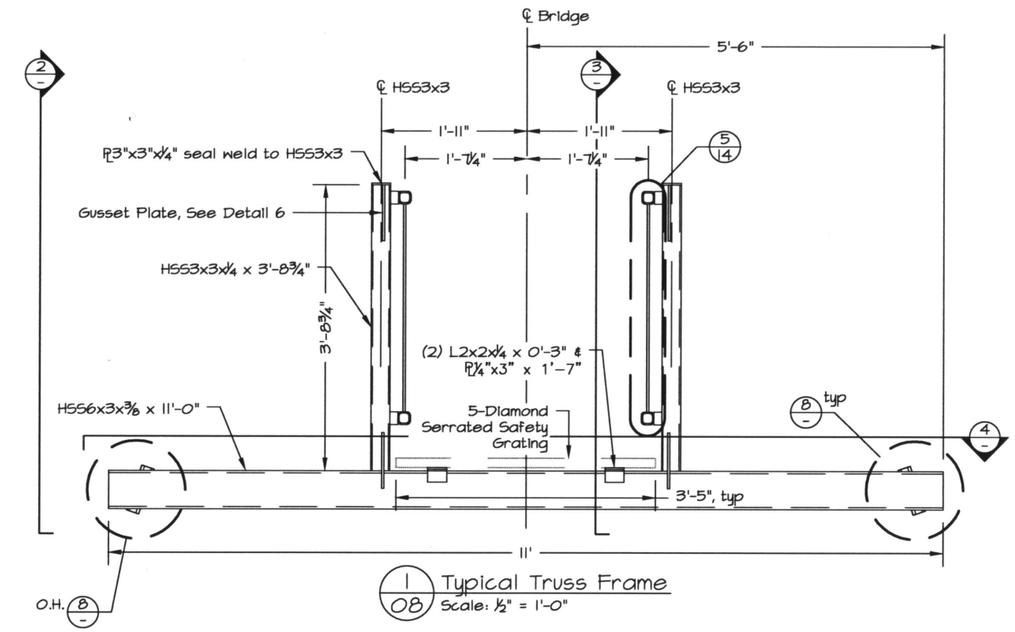

1/08 Typical Truss Frame
Scale: ½" = 1'-0"

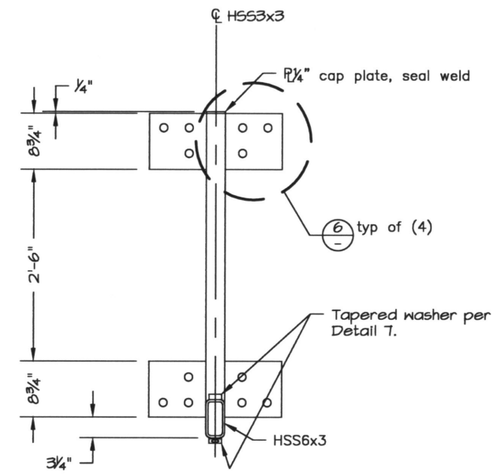

2/- Typical Truss Section
Scale: ½" = 1'-0"

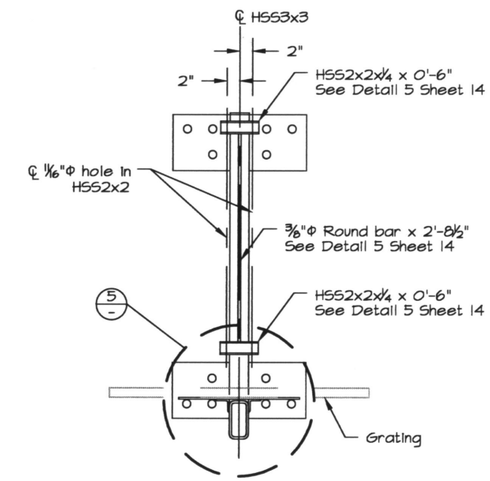

3/- Typical Frame Section
Scale: ½" = 1'-0"

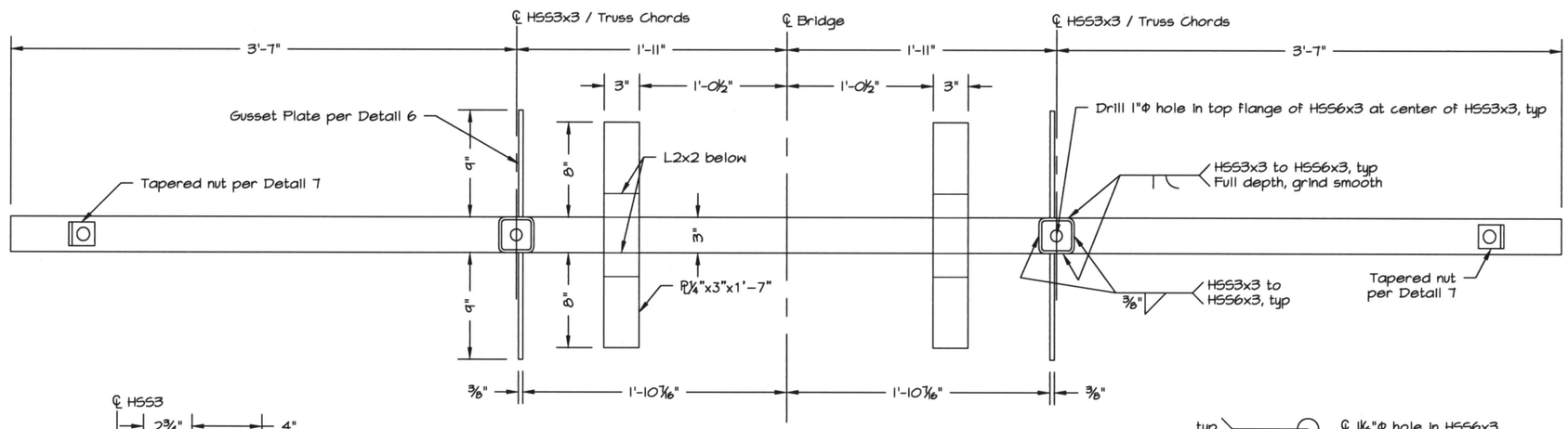

4/08 Typical Frame Plan
Scale: 1" = 1'-0"

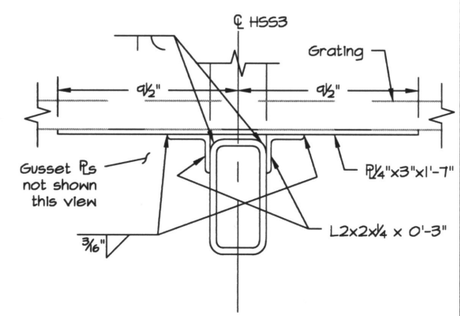

5/- Grating Support Detail
Scale: 1½" = 1'-0"

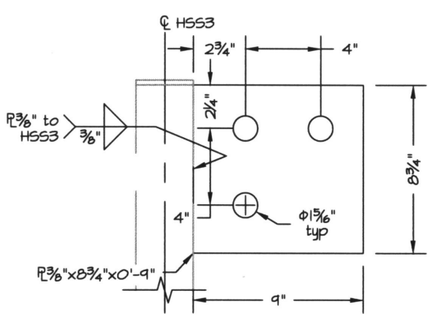

6/- Truss Chord Gusset PL
Scale: 1½" = 1'-0"

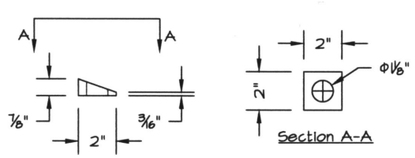

7/- Tapered Nut Detail
Scale: 1½" = 1'-0"

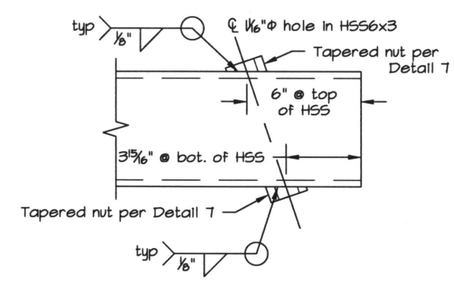

8/- Cable Attachment Detail
Scale: 1½" = 1'-0"

Do not scale any critical dimension. Use provided dimensions to derive. If a critical dimension is missing, request clarification from the Engineer of Record.

STATE OF ALASKA
49 TH
Peter A. Giessel
2016-08-07
SE-13666
REGISTERED PROFESSIONAL ENGINEER

Plans Developed By:
Giessel Technical Services, Inc.
17450 N Juanita Lp, 99577
(907) 887-6356
AECC1412

STATE OF ALASKA DEPARTMENT OF NATURAL RESOURCES

BYERS LAKE
BYERS LAKE BRIDGE DESIGN
PROJECT No. 78050-2

Typical Truss Frame Details

ALASKA STATE PARKS

PREPARED: PAG
DRAWN: PAG
REVIEWED: XXX
DATE: 2016-08-07

SHEET 13 OF 28 SHEETS

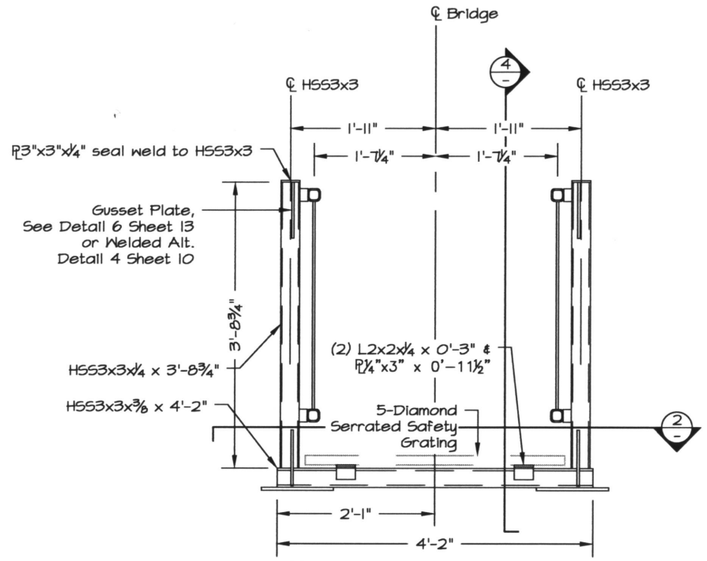

1/08 End Truss Frame
Scale: ½" = 1'-0"

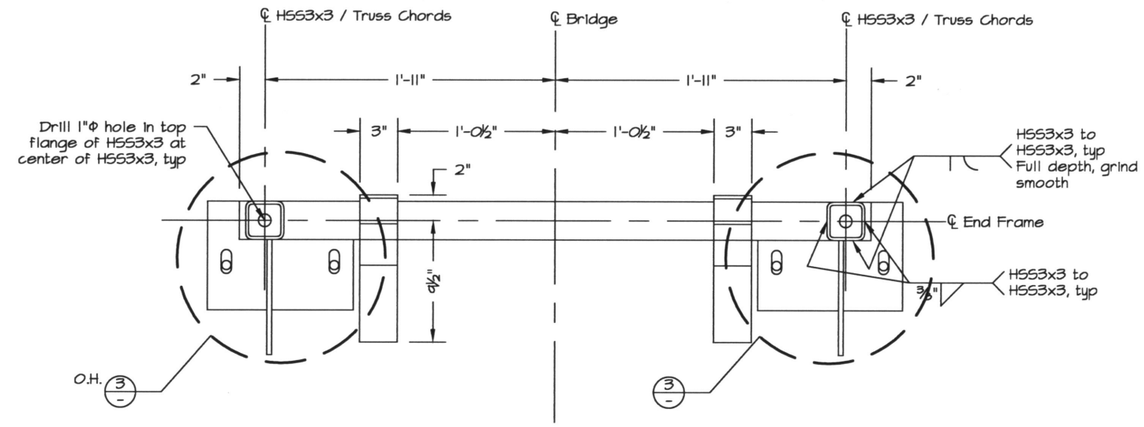

2/08 End Frame Plan
Scale: 1" = 1'-0"

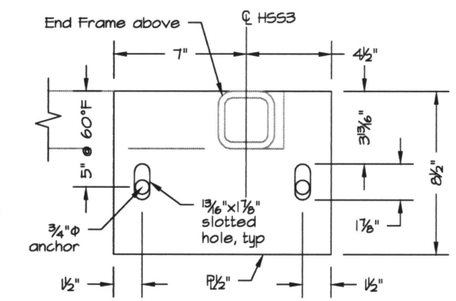

3/- Base Plate Detail
Scale: 1½" = 1'-0"

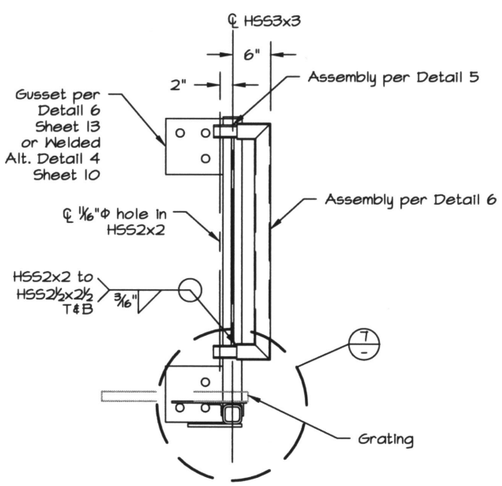

4/- End Frame Section
Scale: ½" = 1'-0"

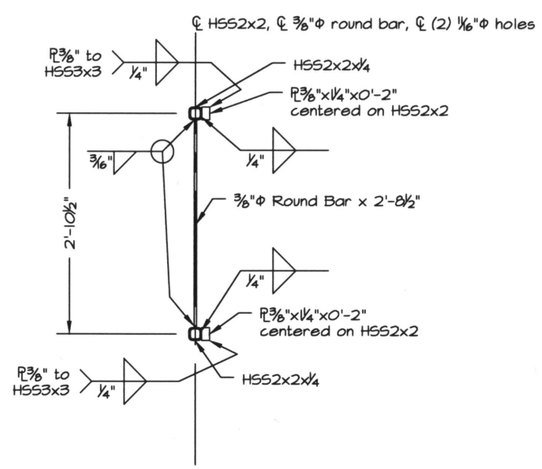

5/13 Pedestrian Railing Attachment
Scale: ½" = 1'-0"

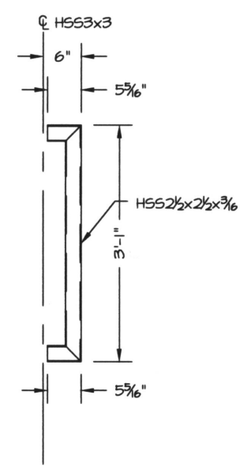

6/- Pedestrian Railing End
Scale: ½" = 1'-0"

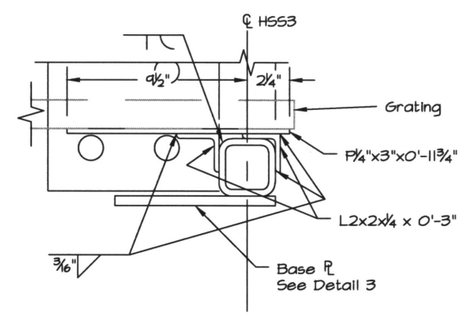

7/- Grating Support Detail
Scale: 1½" = 1'-0"

STATE OF ALASKA 49TH
Peter A. Giessel
2016-08-07
SE-13666
REGISTERED PROFESSIONAL ENGINEER

Do not scale any critical dimension. Use provided dimensions to derive. If a critical dimension is missing, request clarification from the Engineer of Record.

Plans Developed By:
Giessel Technical Services, Inc.
17450 N Juanita Lp, 99577
(907) 887-6356
AECC1412

STATE OF ALASKA DEPARTMENT OF NATURAL RESOURCES

BYERS LAKE
BYERS LAKE BRIDGE DESIGN
PROJECT No. 78050-2

End Truss Frame and Miscellaneous Frame Details

ALASKA STATE PARKS

PREPARED: PAG
DRAWN: PAG
REVIEWED: XXX
DATE: 2016-08-07

SHEET 14 OF 28 SHEETS

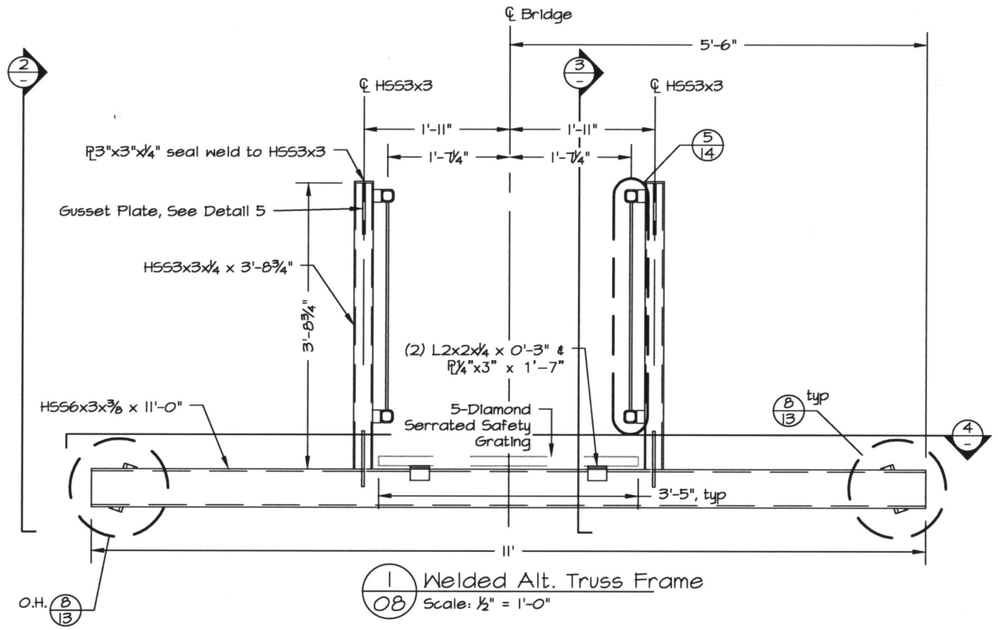

1/08 Welded Alt. Truss Frame
Scale: ½" = 1'-0"

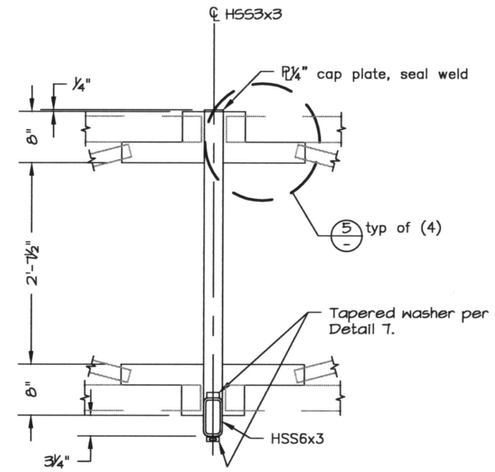

2/- Welded Alt. Truss Section
Scale: ½" = 1'-0"

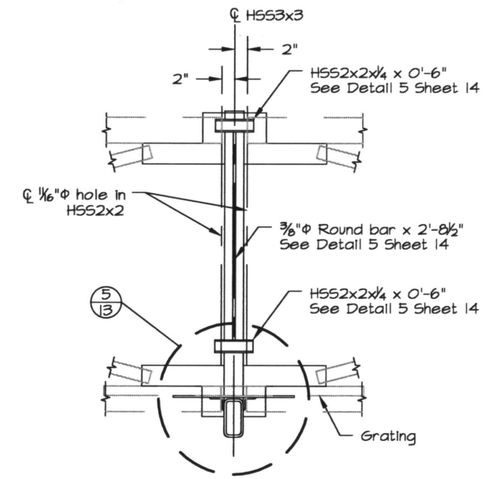

3/- Welded Alt. Frame Section
Scale: ½" = 1'-0"

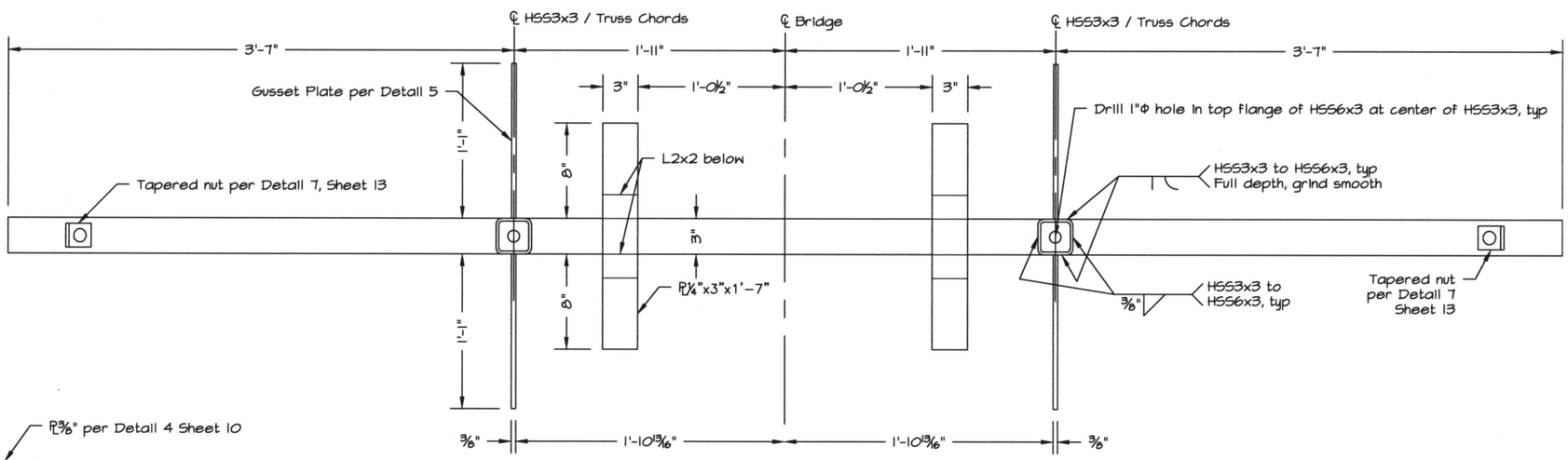

4/08 Welded Alt. Frame Plan
Scale: 1" = 1'-0"

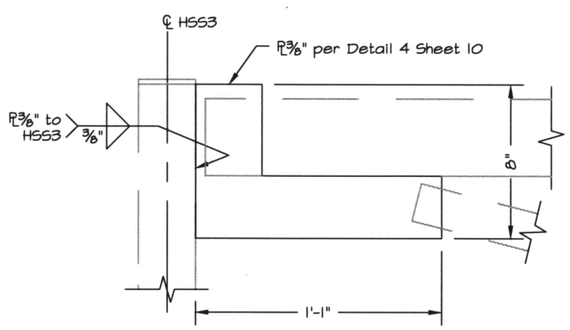

5/- Welded Alt. Truss Chord Gusset PL
Scale: 1½" = 1'-0"

Do not scale any critical dimension. Use provided dimensions to derive. If a critical dimension is missing, request clarification from the Engineer of Record.

STATE OF ALASKA
49 TH
Peter A. Giessel
2016-08-07
SE-13666
REGISTERED PROFESSIONAL ENGINEER

Plans Developed By:
Giessel Technical Services, Inc.
17450 N Juanita Lp, 99577
(907) 887-6356
AECC1412

STATE OF ALASKA DEPARTMENT OF NATURAL RESOURCES

BYERS LAKE
BYERS LAKE BRIDGE DESIGN
PROJECT No. 78050-2

Welded Alternative Truss Frame Details

ALASKA STATE PARKS

PREPARED: PAG
DRAWN: PAG
REVIEWED: XXX
DATE: 2016-08-07

SHEET 15 OF 28 SHEETS

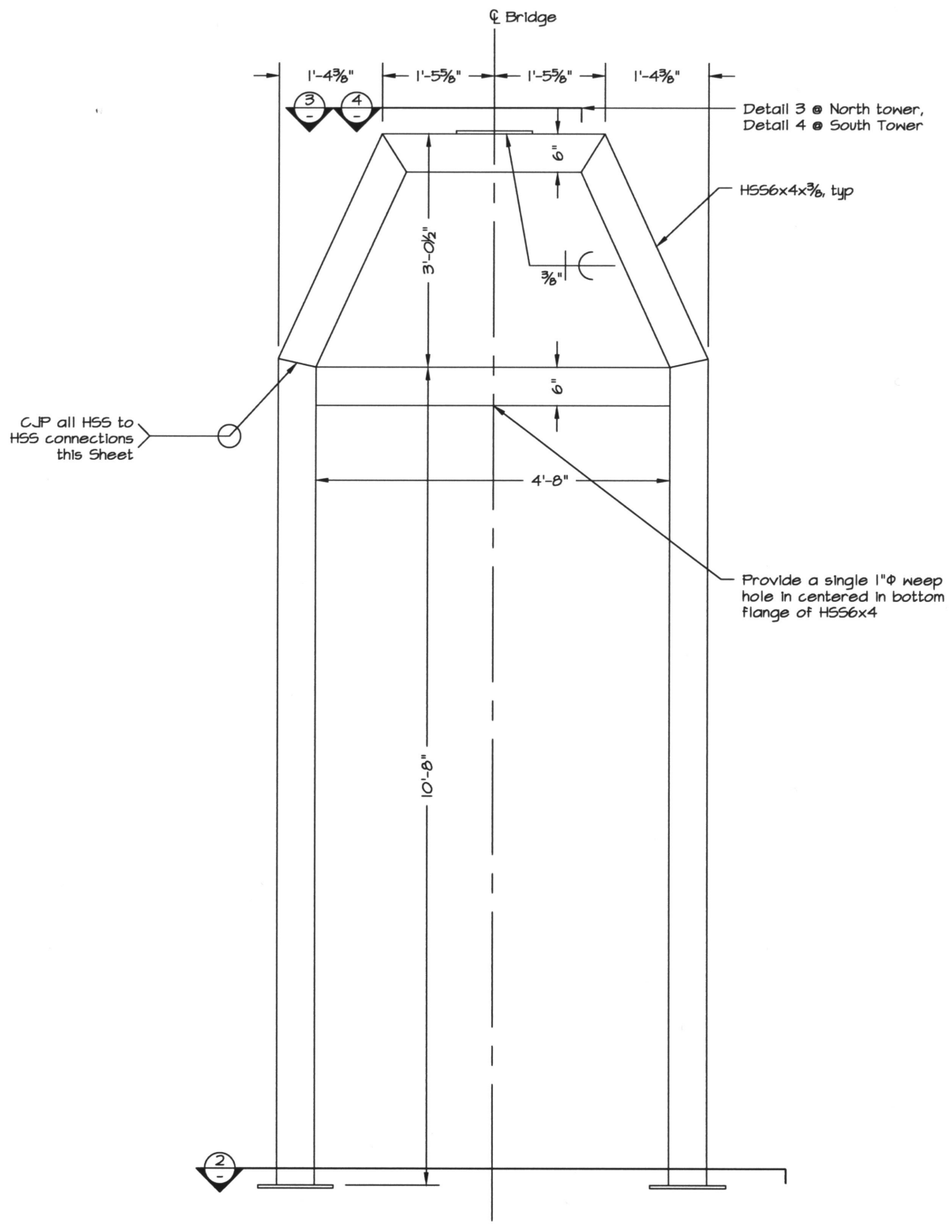

1 / 05 Tower Frame
Scale: ½" = 1'-0"

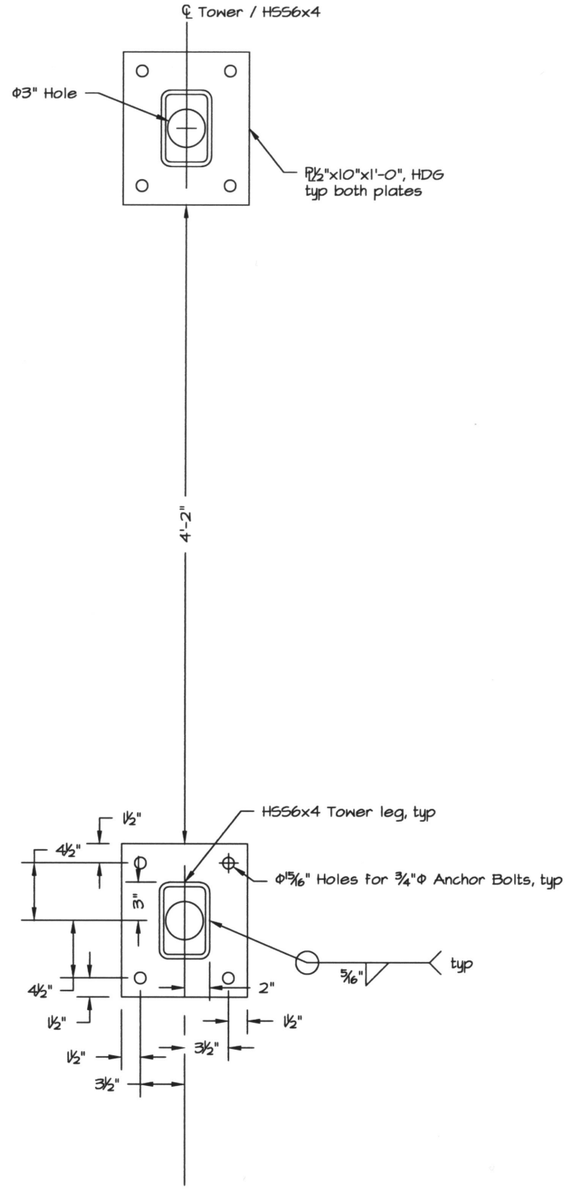

2 / – Tower Base Plates
Scale: 1" = 1'-0"

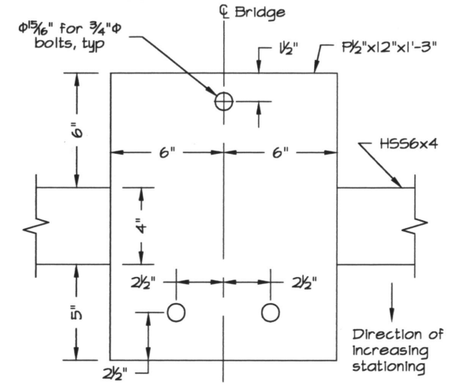

3 / – North Tower Cable Saddle PL
Scale: 1½" = 1'-0"

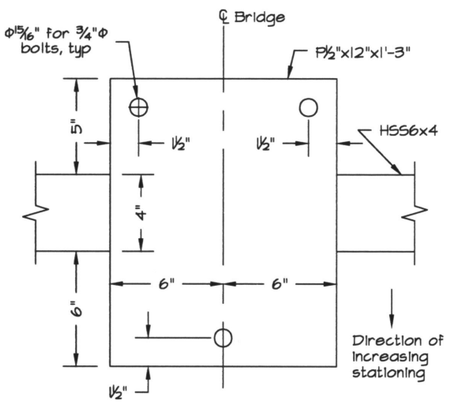

4 / – South Tower Cable Saddle PL
Scale: 1½" = 1'-0"

STATE OF ALASKA
49 TH
Peter A. Giessel
2016-08-07
SE-13666
REGISTERED PROFESSIONAL ENGINEER

Do not scale any critical dimension. Use provided dimensions to derive. If a critical dimension is missing, request clarification from the Engineer of Record.

Plans Developed By:
Giessel Technical Services, Inc.
17450 N Juanita Lp, 99577
(907) 887-6356
AECC1412

STATE OF ALASKA DEPARTMENT OF NATURAL RESOURCES

BYERS LAKE
BYERS LAKE BRIDGE DESIGN
PROJECT No. 78050-2

Cable Support Tower Details

ALASKA STATE PARKS

PREPARED: PAG
DRAWN: PAG
REVIEWED: XXX
DATE: 2016-08-07

SHEET 16 OF 28 SHEETS

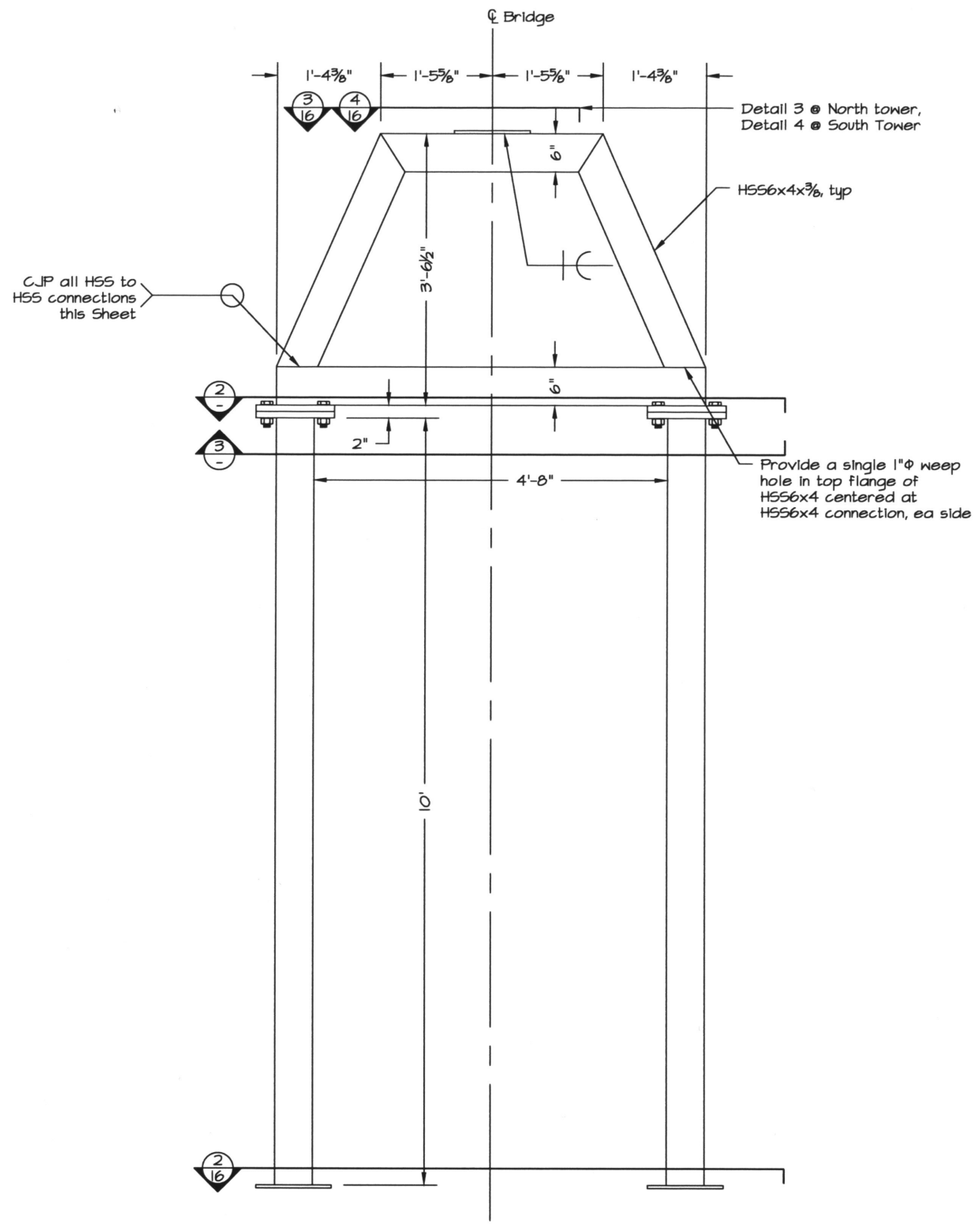

1/05 Alternate Tower Frame
Scale: ½" = 1'-0"

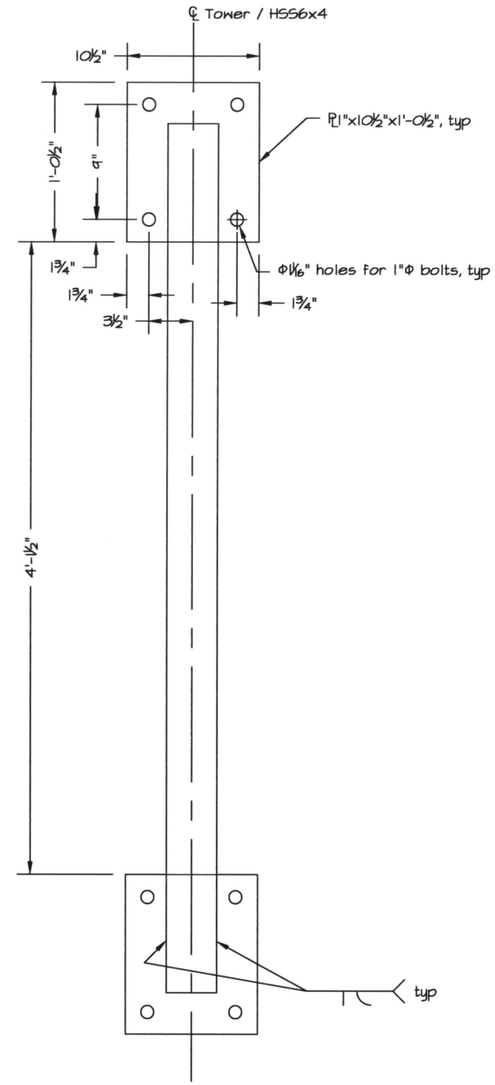

2/- Tower Spliced Connection
Scale: 1" = 1'-0"

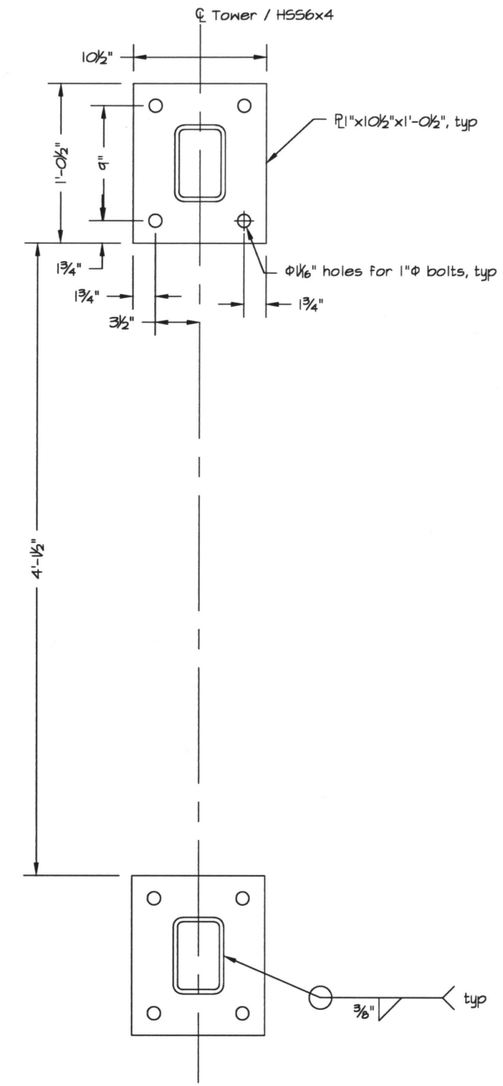

3/- Tower Spliced Connection
Scale: 1" = 1'-0"

At Contractors Option, Modified tower shown this sheet may be used in lieu of tower shown on Sheet 16

STATE OF ALASKA
49 TH
Peter A. Giessel
2016-08-07
SE-13666
REGISTERED PROFESSIONAL ENGINEER

Do not scale any critical dimension. Use provided dimensions to derive. If a critical dimension is missing, request clarification from the Engineer of Record.

Plans Developed By:
Giessel Technical Services, Inc.
17450 N Juanita Lp, 99577
(907) 887-6356
AECC1412

STATE OF ALASKA DEPARTMENT OF NATURAL RESOURCES

BYERS LAKE
BYERS LAKE BRIDGE DESSIGN
PROJECT No. 78050-2

Alternate Cable Support Tower Details

ALASKA STATE PARKS

PREPARED: PAG
DRAWN: PAG
REVIEWED: XXX
DATE: 2016-08-07

SHEET 17 OF 28 SHEETS

HDG entire cable saddle assembly shown this sheet after fabrication. HDG bolts (6) ¾"Φ bolts, nuts and any applicable washers that clamp and connect saddle to tower.

Fully tension ¾"Φ HDG Bolts after cable installation and tensioning. Bolts are to remain loose and tower remain guyed and plumbed until cables are tensioned

As an alternative to the fabricated saddle shown this sheet, cast or machined saddle alternatives may be provided. See Sheet 25 for more details.

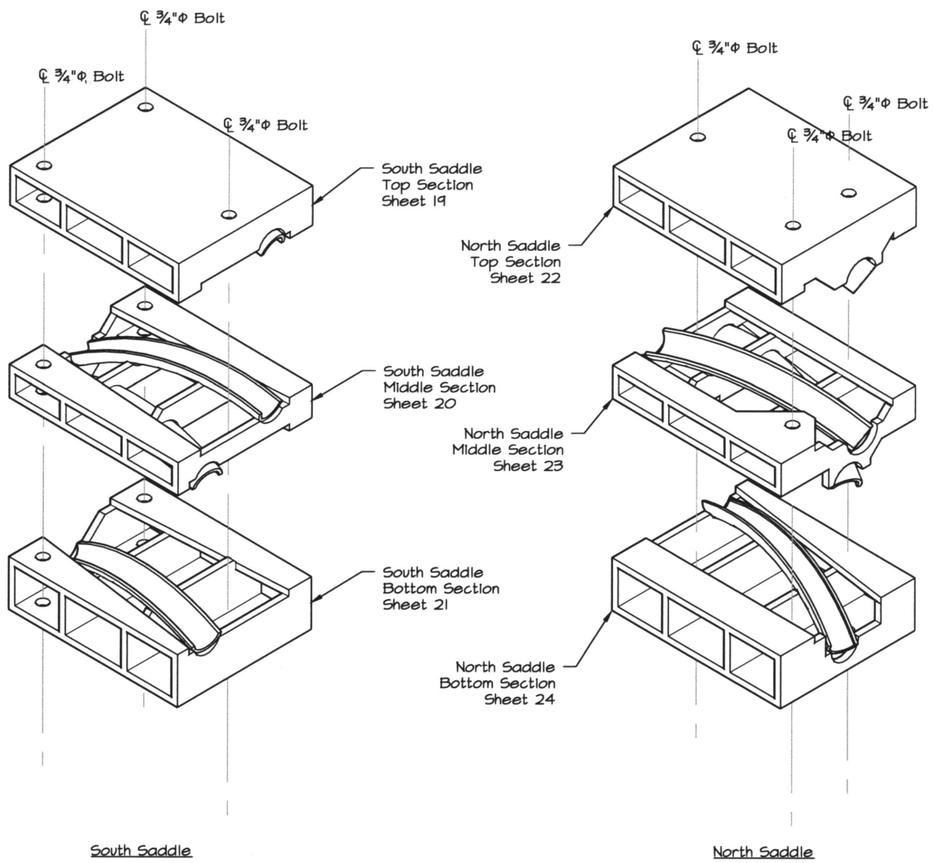

1 – Tower Saddles
Isometric Exploded View

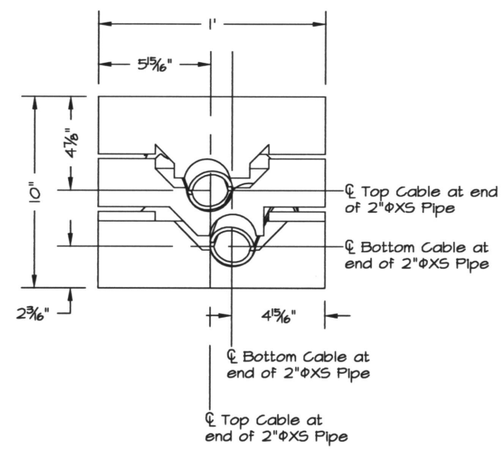

3 – South Tower Saddle Near End
Scale: 1½" = 1'-0"

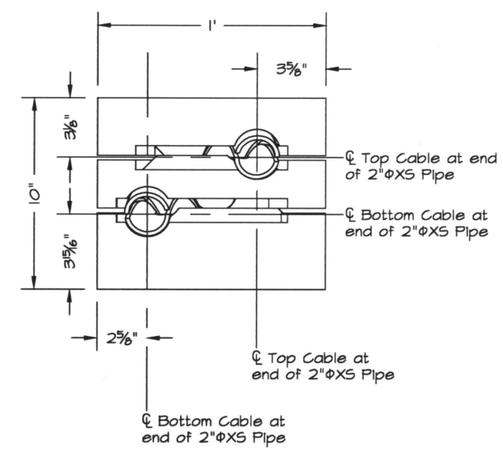

4 – South Tower Saddle Far End
Scale: 1½" = 1'-0"

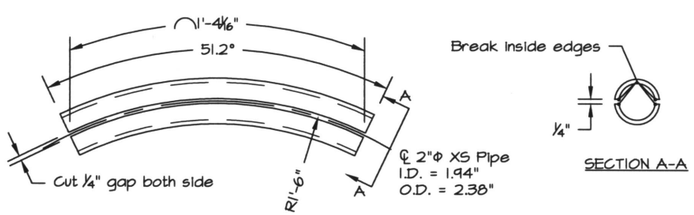

2 – Saddle 2"Φ XS Pipe
Scale: 1½" = 1'-0" Make (4)

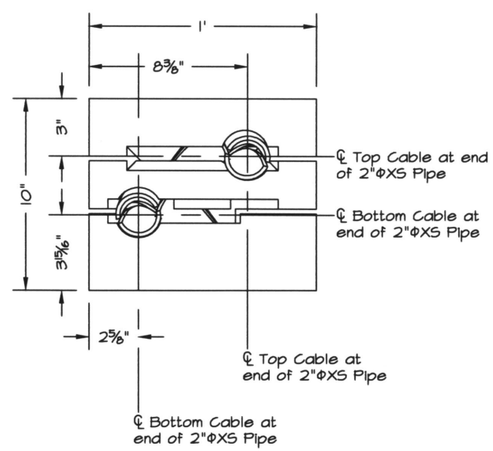

5 – North Tower Saddle Near End
Scale: 1½" = 1'-0"

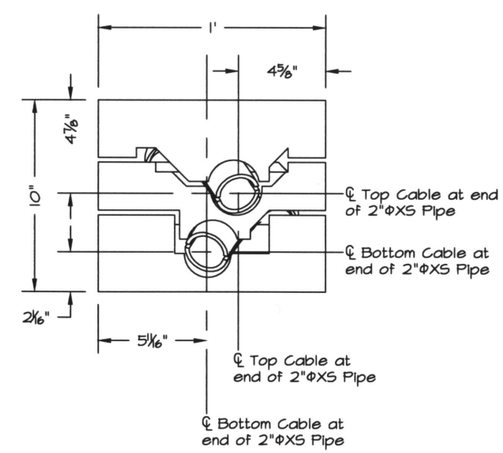

6 – North Tower Saddle Far End
Scale: 1½" = 1'-0"

Do not scale any critical dimension. Use provided dimensions to derive. If a critical dimension is missing, request clarification from the Engineer of Record.

STATE OF ALASKA
49 TH
Peter A. Giessel
2016-08-07
SE-13666
REGISTERED PROFESSIONAL ENGINEER

Plans Developed By:
Giessel Technical Services, Inc.
17450 N Juanita Lp, 99577
(907) 887-6356
AECC1412

STATE OF ALASKA DEPARTMENT OF NATURAL RESOURCES

Cable Saddles Overview

BYERS LAKE
BYERS LAKE BRIDGE DESSIGN
PROJECT No. 78050-2

ALASKA STATE PARKS

PREPARED: PAG
DRAWN: PAG
REVIEWED: XXX
DATE: 2016-08-07

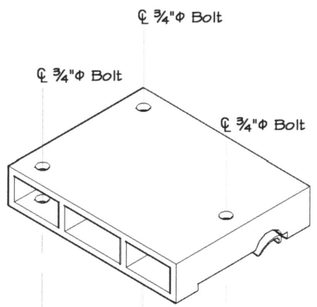

1 / – South Tower Saddle Top Section
Isometric View

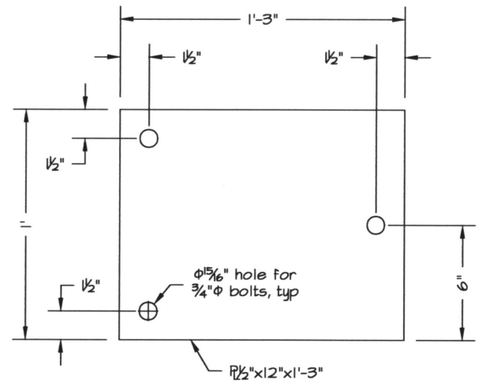

2 / – South Tower Saddle Plate 1
Scale: 1½" = 1'-0"

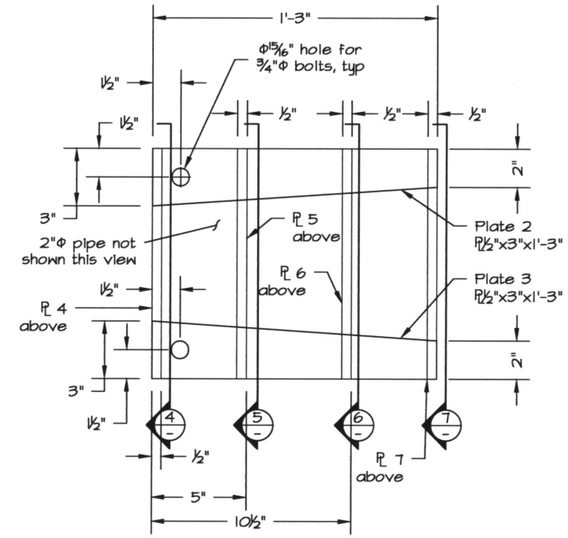

3 / – South Tower Saddle Plate 2, 3
Scale: 1½" = 1'-0"

HDG entire cable saddle assembly shown this sheet after fabrication.

All PL½" to PL½" connections shall be CJP welded joints.

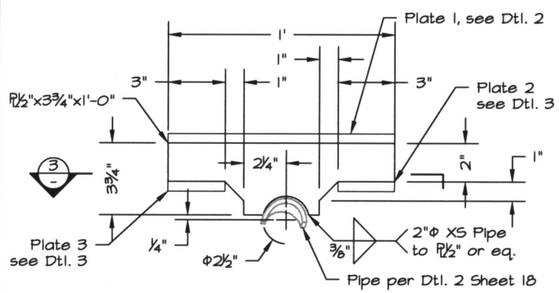

4 / – South Tower Saddle Plate 4
Scale: 1½" = 1'-0"

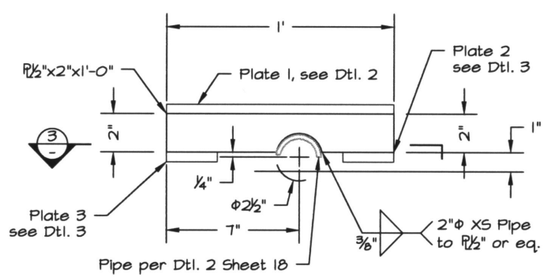

5 / – South Tower Saddle Plate 5
Scale: 1½" = 1'-0"

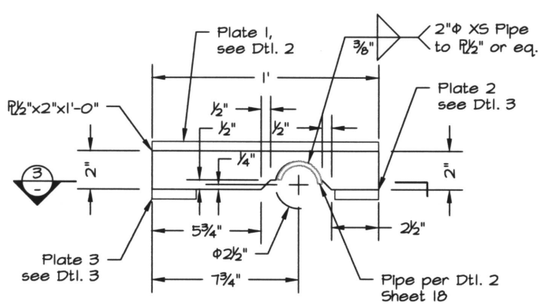

6 / – South Tower Saddle Plate 6
Scale: 1½" = 1'-0"

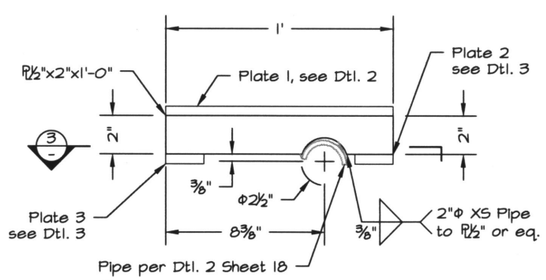

7 / – South Tower Saddle Plate 7
Scale: 1½" = 1'-0"

Do not scale any critical dimension. Use provided dimensions to derive. If a critical dimension is missing, request clarification from the Engineer of Record.

STATE OF ALASKA
49 TH
Peter A. Giessel
2016-08-07
SE-13666
REGISTERED PROFESSIONAL ENGINEER

Plans Developed By:
Giessel Technical Services, Inc.
17450 N Juanita Lp, 99577
(907) 887-6356
AECC1412

STATE OF ALASKA DEPARTMENT OF NATURAL RESOURCES

BYERS LAKE
BYERS LAKE BRIDGE DESIGN
PROJECT No. 78050-2

Cable Saddles
South Tower Saddle Top

ALASKA STATE PARKS

PREPARED: PAG
DRAWN: PAG
REVIEWED: XXX
DATE: 2016-08-07

SHEET 19 OF 28 SHEETS

HDG entire cable saddle assembly shown this sheet after fabrication.

All PL½" to PL½" connections shall be CJP welded joints.

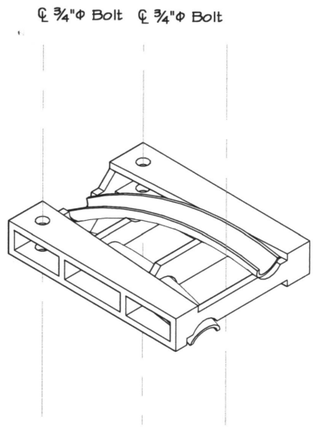

1 – South Tower Saddle Middle Section
Isometric View

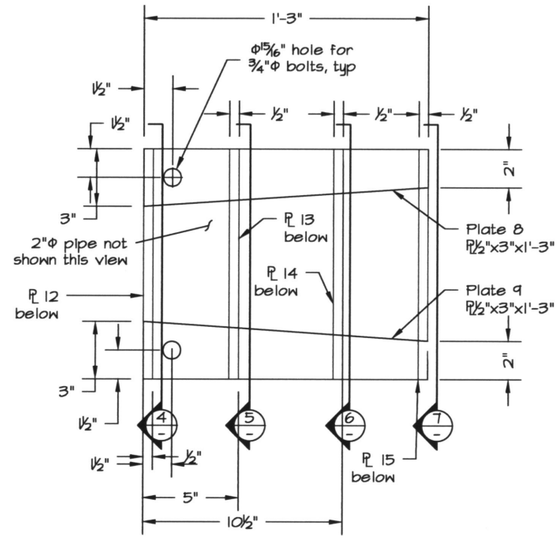

2 – South Tower Saddle Plate 8, 9
Scale: 1½" = 1'-0"

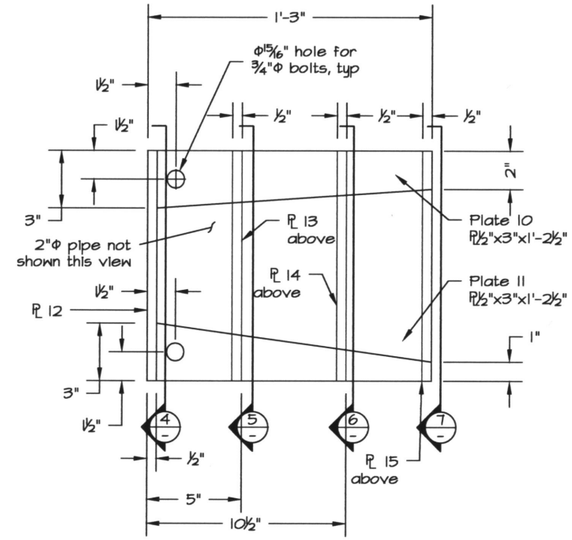

3 – South Tower Saddle Plate 10, 11
Scale: 1½" = 1'-0"

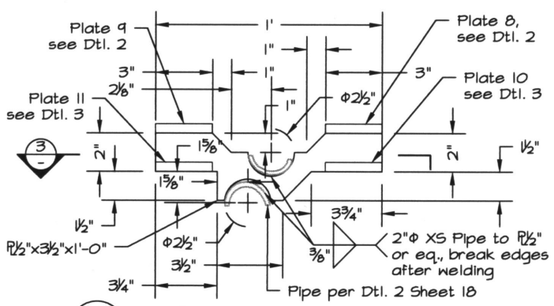

4 – South Tower Saddle Plate 12
Scale: 1½" = 1'-0"

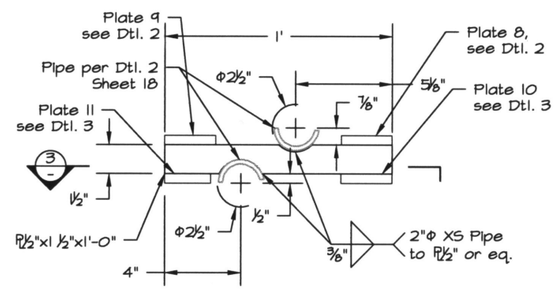

5 – South Tower Saddle Plate 13
Scale: 1½" = 1'-0"

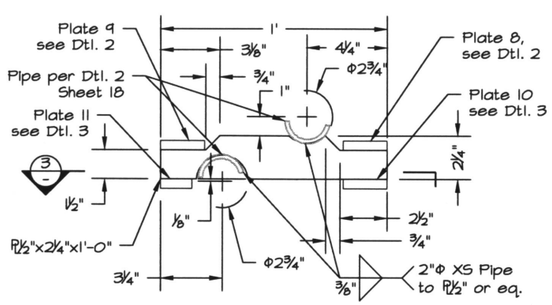

6 – South Tower Saddle Plate 14
Scale: 1½" = 1'-0"

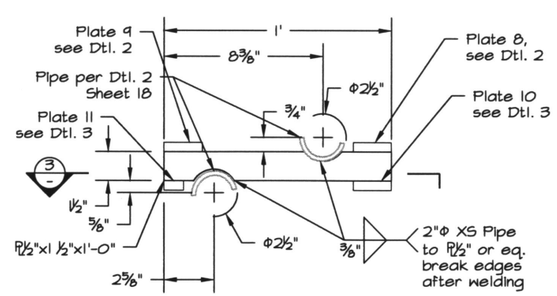

7 – South Tower Saddle Plate 15
Scale: 1½" = 1'-0"

Do not scale any critical dimension. Use provided dimensions to derive. If a critical dimension is missing, request clarification from the Engineer of Record.

STATE OF ALASKA 49TH
Peter A. Giessel
2016-08-07
SE-13666
REGISTERED PROFESSIONAL ENGINEER

Plans Developed By:
Giessel Technical Services, Inc.
17450 N Juanita Lp, 99577
(907) 887-6356
AECC1412

STATE OF ALASKA DEPARTMENT OF NATURAL RESOURCES

BYERS LAKE
BYERS LAKE BRIDGE DESIGN
PROJECT No. 78050-2

Cable Saddles
South Tower Saddle Middle

ALASKA STATE PARKS

PREPARED: PAG
DRAWN: PAG
REVIEWED: XXX
DATE: 2016-08-07

SHEET 20 OF 28 SHEETS

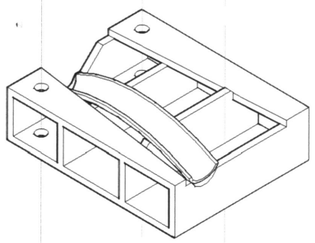

1 – South Tower Saddle Bottom Section
Isometric View

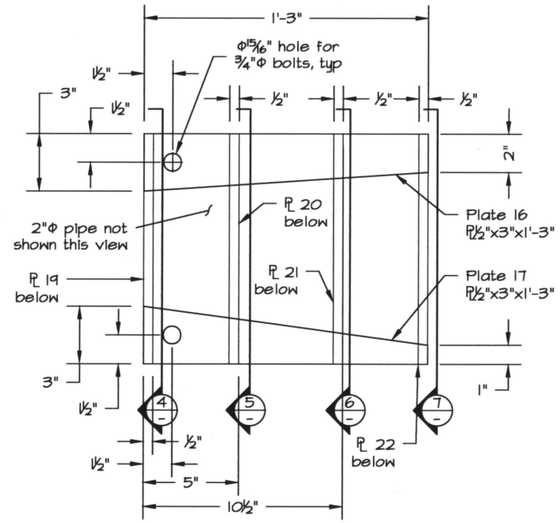

2 – South Tower Saddle Plate 16, 17
Scale: 1½" = 1'-0"

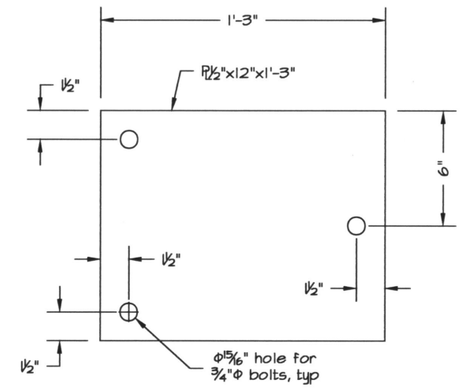

3 – South Tower Saddle Plate 18
Scale: 1½" = 1'-0"

HDG entire cable saddle assembly shown this sheet after fabrication.

All PL½" to PL½" connections shall be CJP welded joints.

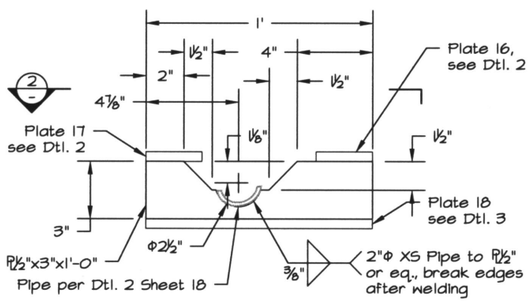

4 – South Tower Saddle Plate 19
Scale: 1½" = 1'-0"

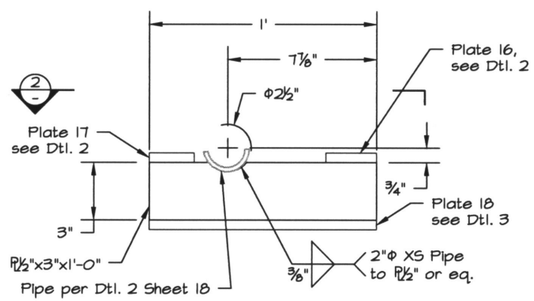

5 – South Tower Saddle Plate 20
Scale: 1½" = 1'-0"

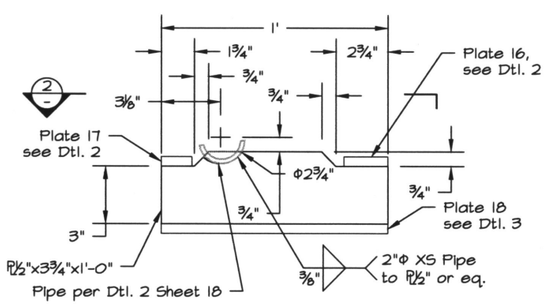

6 – South Tower Saddle Plate 21
Scale: 1½" = 1'-0"

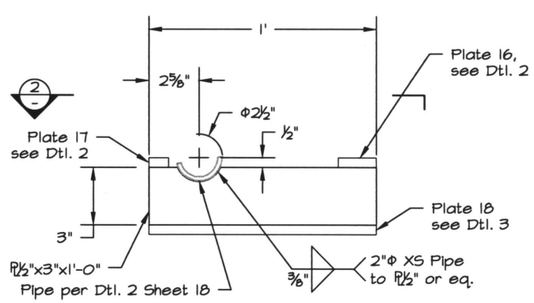

7 – South Tower Saddle Plate 22
Scale: 1½" = 1'-0"

Do not scale any critical dimension. Use provided dimensions to derive. If a critical dimension is missing, request clarification from the Engineer of Record.

Plans Developed By:
Giessel Technical Services, Inc.
17450 N Juanita Lp, 99577
(907) 887-6356
AECC1412

STATE OF ALASKA DEPARTMENT OF NATURAL RESOURCES

BYERS LAKE
BYERS LAKE BRIDGE DESIGN
PROJECT No. 78050-2

Cable Saddles
South Tower Saddle Bottom

ALASKA STATE PARKS

PREPARED: PAG
DRAWN: PAG
REVIEWED: XXX
DATE: 2016-08-07

SHEET 21 OF 28 SHEETS

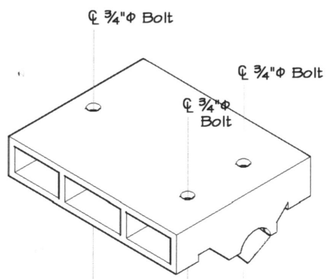

1 North Tower Saddle Top Section
Isometric View

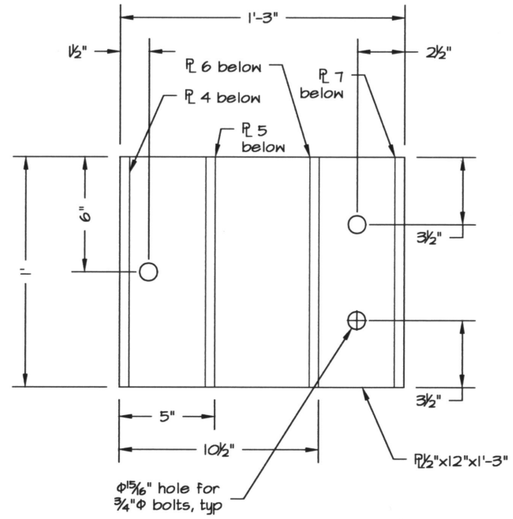

2 North Tower Saddle Plate 1
Scale: 1½" = 1'-0"

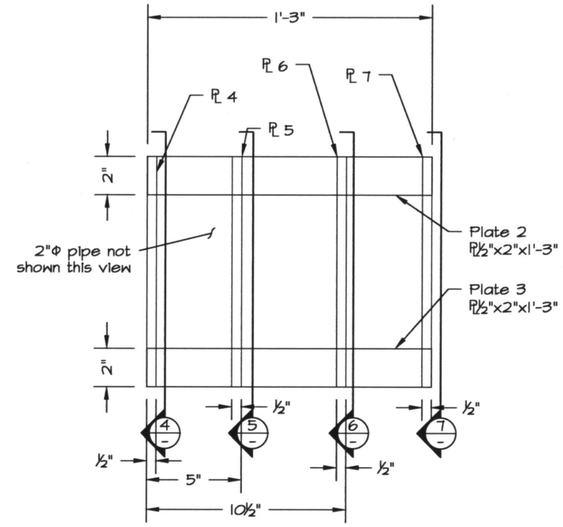

3 North Tower Saddle Plate 2, 3
Scale: 1½" = 1'-0"

HDG entire cable saddle assembly shown this sheet after fabrication.

All PL½" to PL½" connections shall be CJP welded joints.

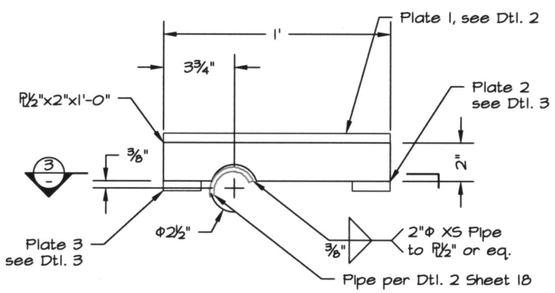

4 North Tower Saddle Plate 4
Scale: 1½" = 1'-0"

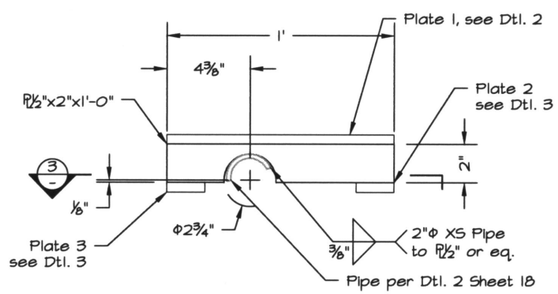

5 North Tower Saddle Plate 5
Scale: 1½" = 1'-0"

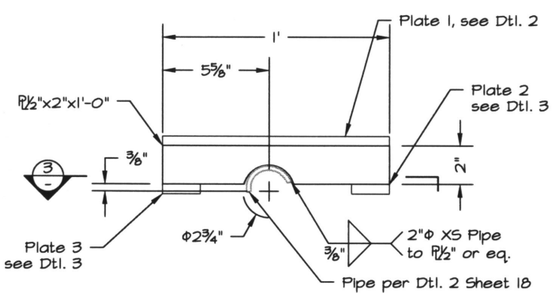

6 North Tower Saddle Plate 6
Scale: 1½" = 1'-0"

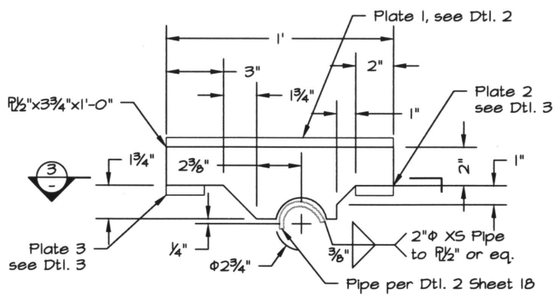

7 North Tower Saddle Plate 7
Scale: 1½" = 1'-0"

Do not scale any critical dimension. Use provided dimensions to derive. If a critical dimension is missing, request clarification from the Engineer of Record.

STATE OF ALASKA 49TH
Peter A. Giessel
2016-08-07
SE-13666
REGISTERED PROFESSIONAL ENGINEER

Plans Developed By:
Giessel Technical Services, Inc.
17450 N Juanita Lp, 99577
(907) 887-6356
AECC1412

STATE OF ALASKA DEPARTMENT OF NATURAL RESOURCES

BYERS LAKE
BYERS LAKE BRIDGE DESIGN
PROJECT No. 78050-2

Cable Saddles
North Tower Saddle Top

ALASKA STATE PARKS

PREPARED: PAG
DRAWN: PAG
REVIEWED: XXX
DATE: 2016-08-07

SHEET 22 OF 28 SHEETS

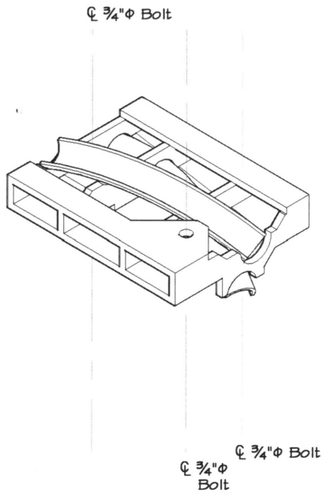

1 North Tower Saddle Middle Section
Isometric View

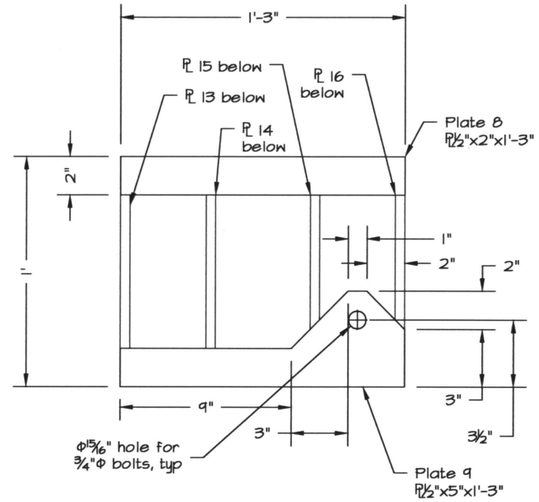

2 North Tower Saddle Plate 8, 9
Scale: 1½" = 1'-0"

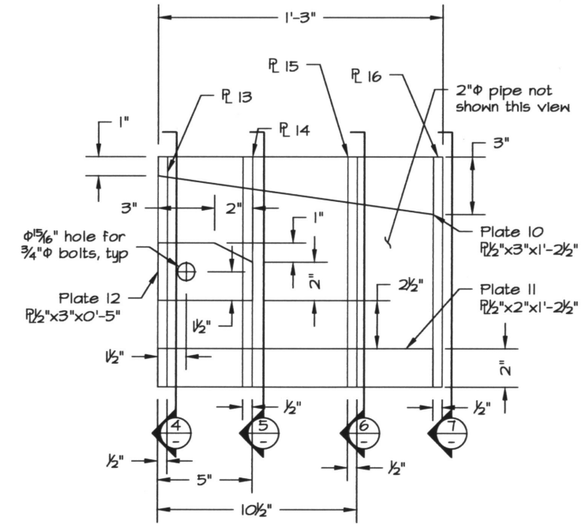

HDG entire cable saddle assembly shown this sheet after fabrication.

All PL½" to PL½" connections shall be CJP welded joints.

3 North Tower Saddle Plate 10, 11, 12
Scale: 1½" = 1'-0"

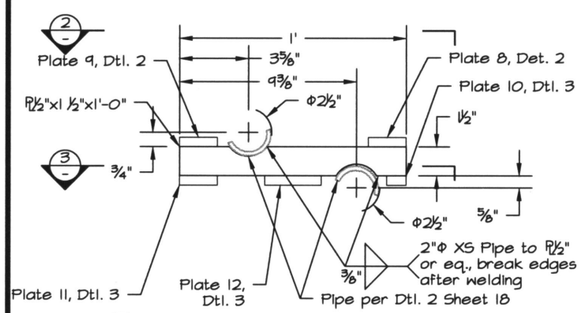

4 North Tower Saddle Plate 13
Scale: 1½" = 1'-0"

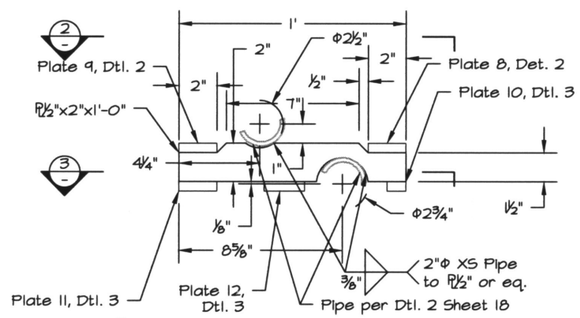

5 North Tower Saddle Plate 14
Scale: 1½" = 1'-0"

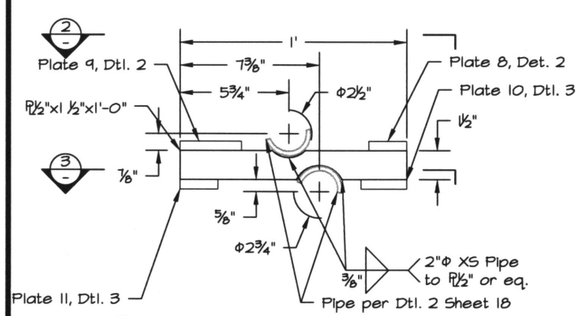

6 North Tower Saddle Plate 15
Scale: 1½" = 1'-0"

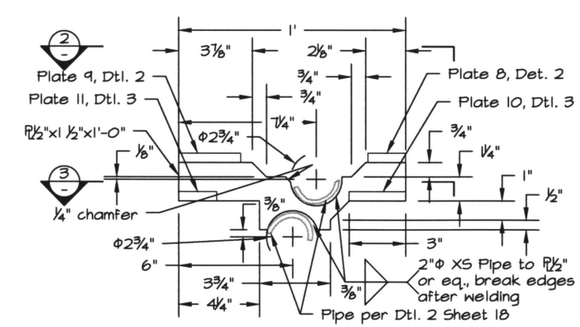

7 North Tower Saddle Plate 16
Scale: 1½" = 1'-0"

Do not scale any critical dimension. Use provided dimensions to derive. If a critical dimension is missing, request clarification from the Engineer of Record.

Plans Developed By:
Giessel Technical Services, Inc.
17450 N Juanita Lp, 99577
(907) 887-6356
AECC1412

STATE OF ALASKA DEPARTMENT OF NATURAL RESOURCES

BYERS LAKE
BYERS LAKE BRIDGE DESIGN
PROJECT No. 78050-2

Cable Saddles
North Tower Saddle Middle

ALASKA STATE PARKS

PREPARED: PAG
DRAWN: PAG
REVIEWED: XXX
DATE: 2016-08-07

SHEET 23 OF 28 SHEETS

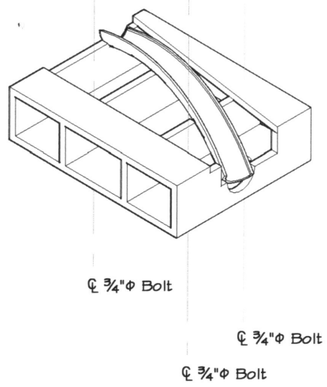

1 North Tower Saddle Bottom Section
Isometric View

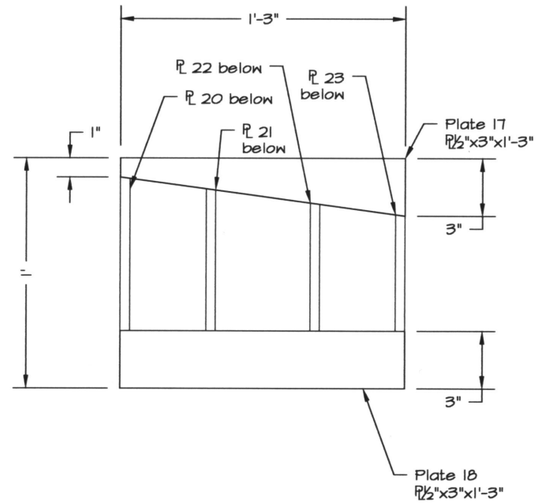

2 North Tower Saddle Plate 17, 18
Scale: 1½" = 1'-0"

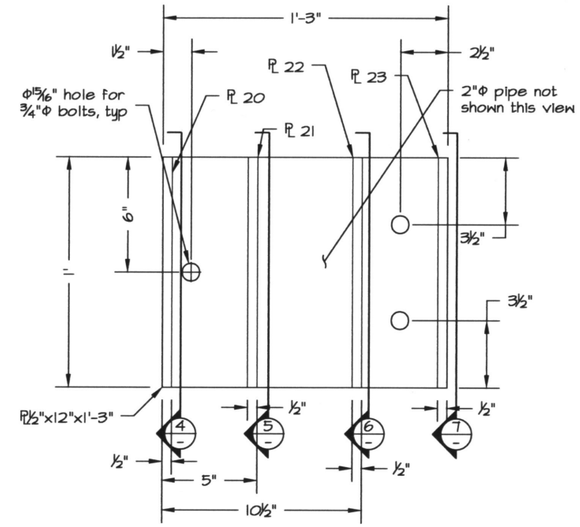

HDG entire cable saddle assembly shown this sheet after fabrication.

All PL½" to PL½" connections shall be CJP welded joints.

3 North Tower Saddle Plate 19
Scale: 1½" = 1'-0"

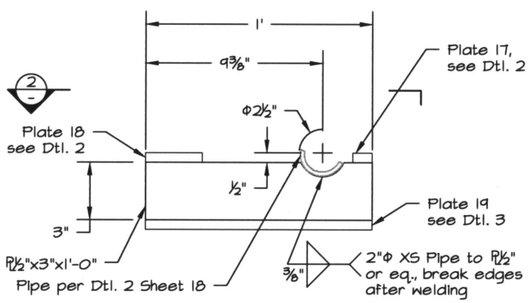

4 North Tower Saddle Plate 20
Scale: 1½" = 1'-0"

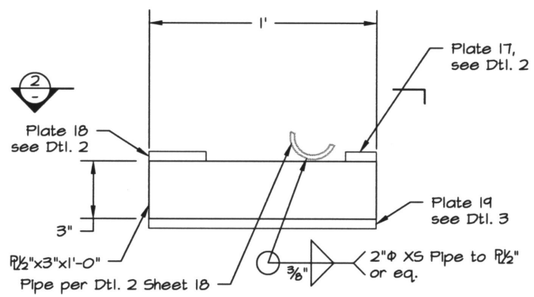

5 North Tower Saddle Plate 21
Scale: 1½" = 1'-0"

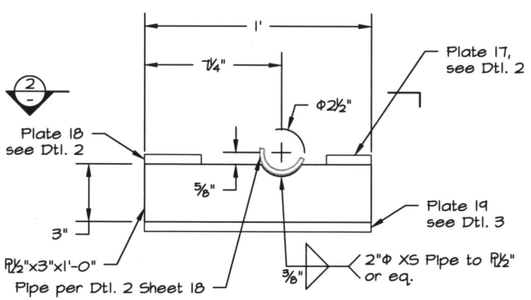

6 North Tower Saddle Plate 22
Scale: 1½" = 1'-0"

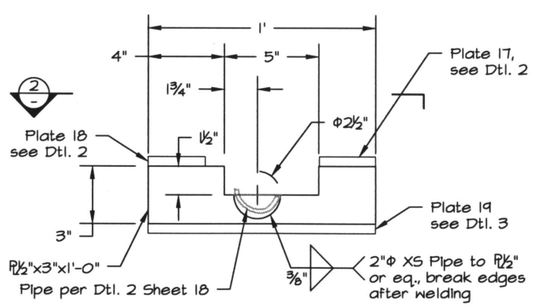

7 North Tower Saddle Plate 23
Scale: 1½" = 1'-0"

Do not scale any critical dimension. Use provided dimensions to derive. If a critical dimension is missing, request clarification from the Engineer of Record.

STATE OF ALASKA
49 TH
Peter A. Giessel
2016-08-07
SE-13666
REGISTERED PROFESSIONAL ENGINEER

Plans Developed By:
Giessel Technical Services, Inc.
17450 N Juanita Lp, 99577
(907) 887-6356
AECC1412

STATE OF ALASKA DEPARTMENT OF NATURAL RESOURCES

BYERS LAKE
BYERS LAKE BRIDGE DESIGN
PROJECT No. 78050-2

Cable Saddles
North Tower Saddle Bottom

ALASKA STATE PARKS

PREPARED: PAG
DRAWN: PAG
REVIEWED: XXX
DATE: 2016-08-07

SHEET 24 OF 28 SHEETS

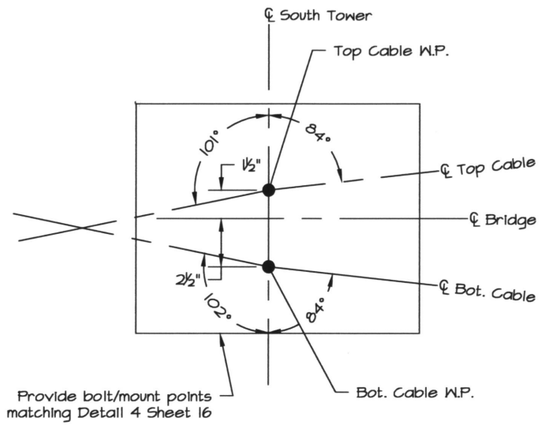

1 South Tower Saddle Req. Plan
Scale: 1½" = 1'-0"

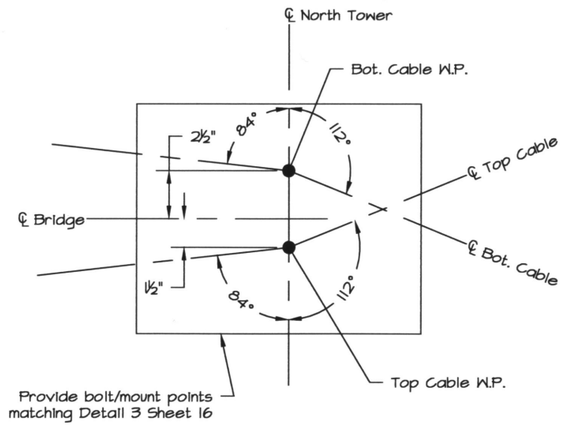

3 North Tower Saddle Req. Plan
Scale: 1½" = 1'-0"

If cast or machined cable saddles are provided in lieu of the cable saddles shown on sheets 18 through 24, the provided saddles shall meet the following requirements:

1. Steel shall be minimum 36 ksi and shall be solid or designed to support a minimum of 55 kip (LRFD factored) load vertically from cable reactions.
2. The cable profile entering and exiting the saddle shall be as shown on this sheet in Details 1 through 4.
3. The minimum cable radius due to the saddles shall be 1'-6".
4. All edges where the cable enters or exits the saddle shall be broken (no sharp edges).
5. Provide for ¾"Φ bolts matching the location/pattern shown on Sheet 16 for mounting to the tower connection plates.
6. Fully tension ¾"Φ HDG Bolts after cable installation and tensioning. Bolts are to remain loose and tower remain guyed and plumbed until cables are tensioned
7. Submit shop drawings and if saddle is not solid, calculations to the Engineer for approval prior to fabrication.
8. HDG entire cable saddle assembly after fabrication.

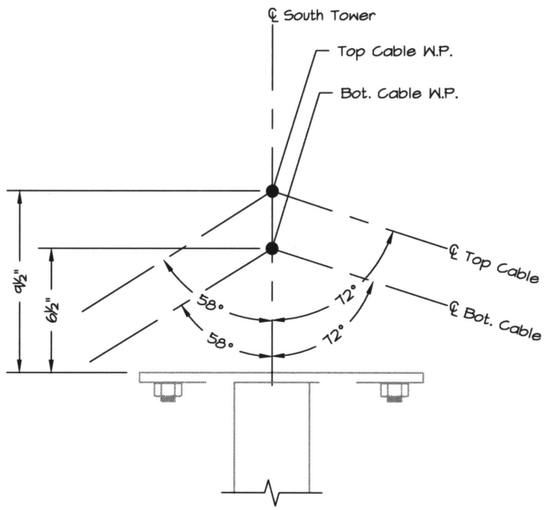

2 South Tower Saddle Req. Profile
Scale: 1½" = 1'-0"

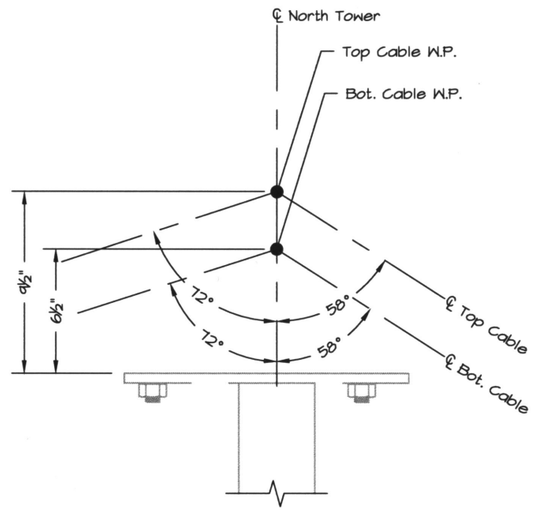

4 North Tower Saddle Req. Profile
Scale: 1½" = 1'-0"

Do not scale any critical dimension. Use provided dimensions to derive. If a critical dimension is missing, request clarification from the Engineer of Record.

STATE OF ALASKA
49 TH
Peter A. Giessel
2016-08-07
SE-13666
REGISTERED PROFESSIONAL ENGINEER

Plans Developed By:
Giessel Technical Services, Inc.
17450 N Juanita Lp, 99577
(907) 887-6356
AECC1412

STATE OF ALASKA DEPARTMENT OF NATURAL RESOURCES

BYERS LAKE
BYERS LAKE BRIDGE DESSIGN
PROJECT No. 78050-2

Cast Cable Saddles
Required Profile

ALASKA STATE PARKS

PREPARED: PAG
DRAWN: PAG
REVIEWED: XXX
DATE: 2016-08-07

SHEET 25 OF 28 SHEETS

NOTE:

1. Full Dead Load Tension at Main Cable Anchors: 18 kip at South Anchor, 19 kip at North Anchor @ 60°F. Subtract 1 kip per 10°F of temperature rise, add 1 kip per 10°F of temperature decline.
2. Tension hanger cable to 1.1 kips under dead load conditions (including grating), using bottom nut. Pretension joint per RCSC using top nut to secure connection.

HANGER CABLE LABEL	UNSTRESSED LENGTH @ 70°F
HC1	9'-10¾"
HC2	6'-3"
HC3	3'-7¾"
HC4	2'-1¼"
HC5	1'-7¼"
HC6	2'-1⅞"
HC7	3'-9"
HC8	6'-4⅞"
HC9	10'-1 ¼"

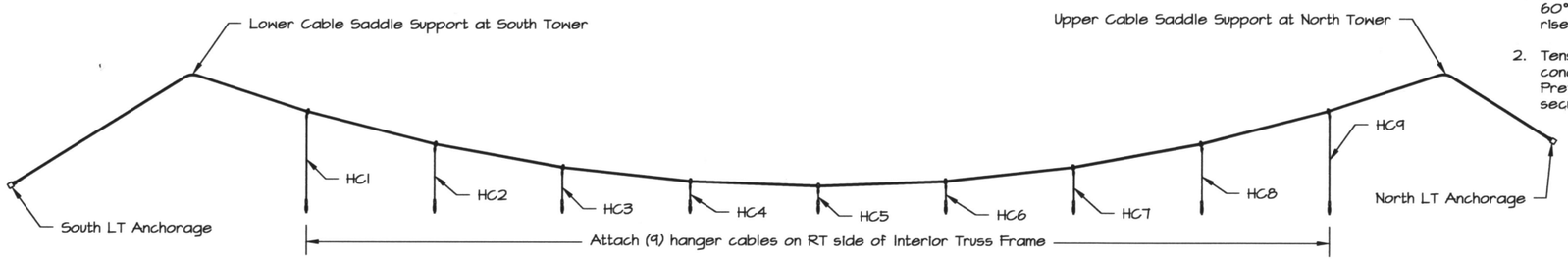

1 Left Cable Profile
Scale: No Scale

Optional CBSI Contact Information:

Provided for convenience only:
Clodfelter Bridge and Structures International, Inc.
245 McCarty Drive
Houston, TX 77029
(713) 675-1180
http://www.cbsiusa.com/

All cables and cable components in this structure are available from CBSI. OAE acceptable.

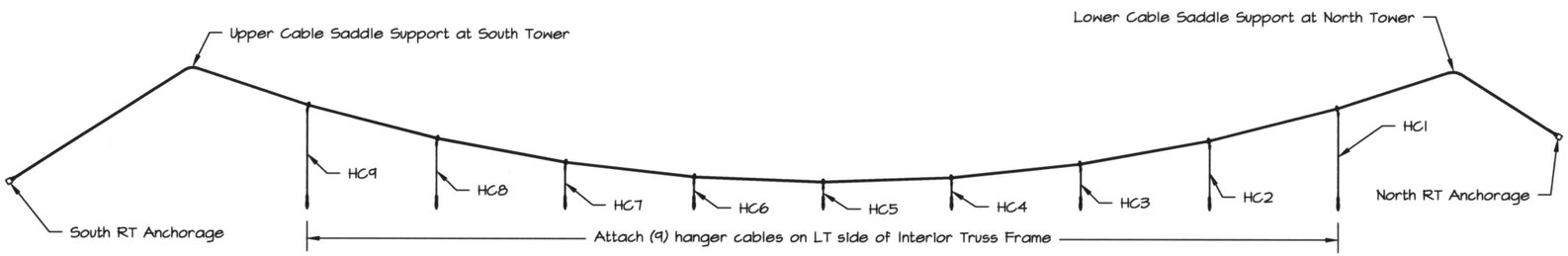

2 Right Cable Profile
Scale: No Scale

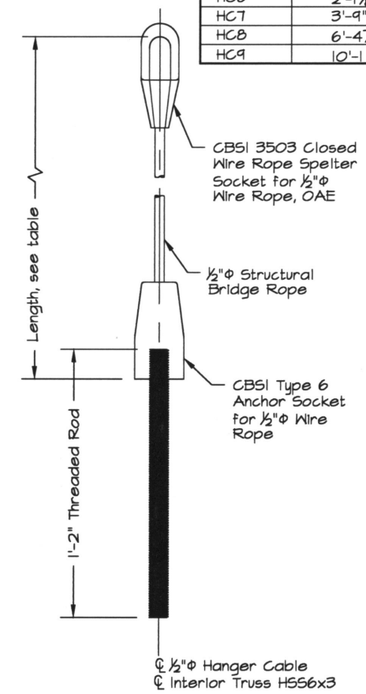

3 Typical Hanger Cable
Scale: 1½" = 1'-0"

See Note 1.

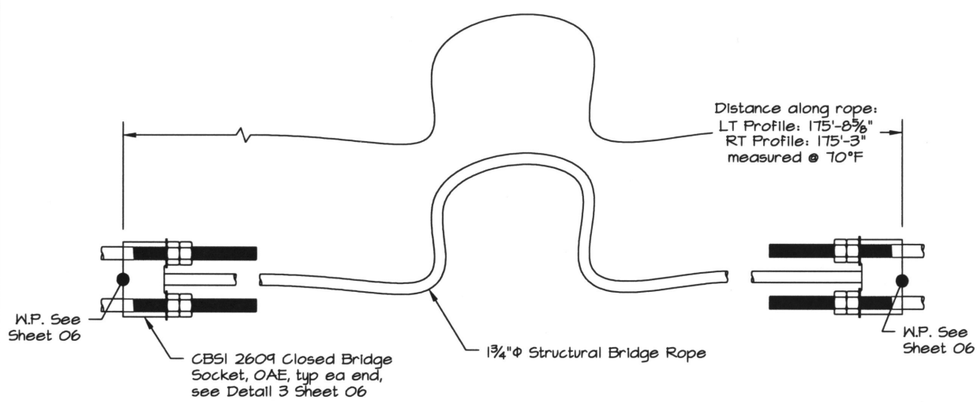

4 Main Bridge Rope Length
Scale: ½" = 1'-0"

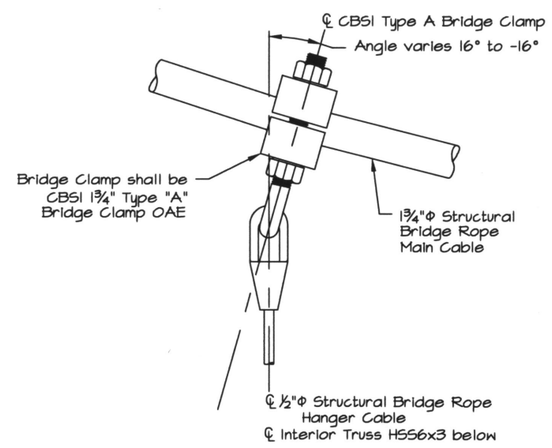

5 Typical Hanger Cable Attachment
Scale: 1½" = 1'-0"

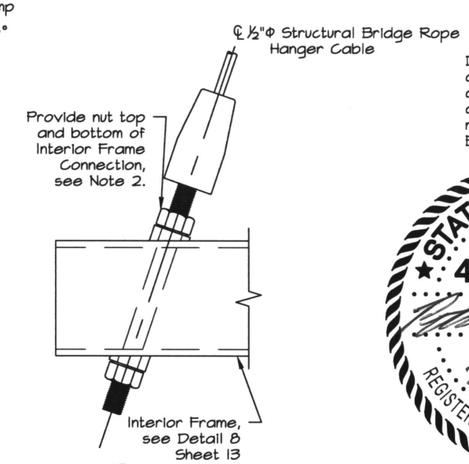

6 Hanger Cable to Frame
Scale: 1½" = 1'-0"

Do not scale any critical dimension. Use provided dimensions to derive. If a critical dimension is missing, request clarification from the Engineer of Record.

STATE OF ALASKA
49 TH
Peter A. Giessel
2016-08-07
SE-13666
REGISTERED PROFESSIONAL ENGINEER

Plans Developed By:
Giessel Technical Services, Inc.
17450 N Juanita Lp, 99577
(907) 887-6356
AECC1412

STATE OF ALASKA DEPARTMENT OF NATURAL RESOURCES

BYERS LAKE
BYERS LAKE BRIDGE DESIGN
PROJECT No. 78050-2

Cable Component Details

ALASKA STATE PARKS

PREPARED: PAG
DRAWN: PAG
REVIEWED: XXX
DATE: 2016-08-07

SHEET 26 OF 28 SHEETS

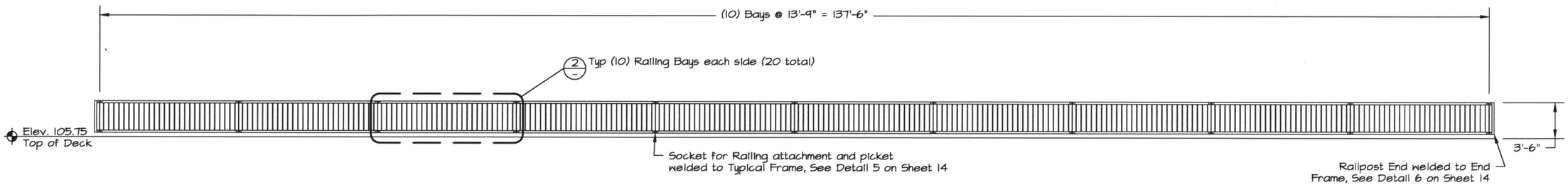

1 / 05 Railing Profile
Scale: 3/32" = 1'-0"

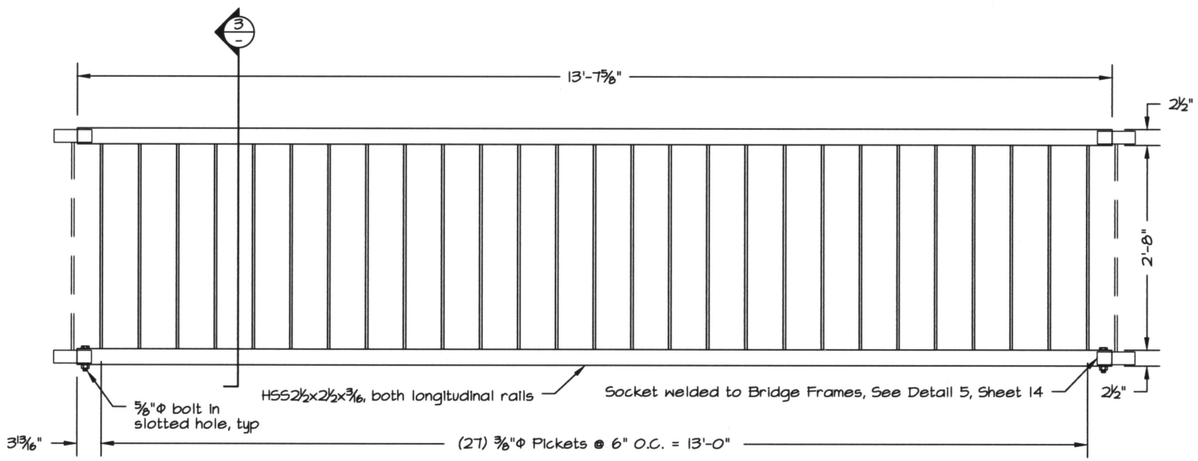

2 / – Typical Railing Bay
Scale: ½" = 1'-0"

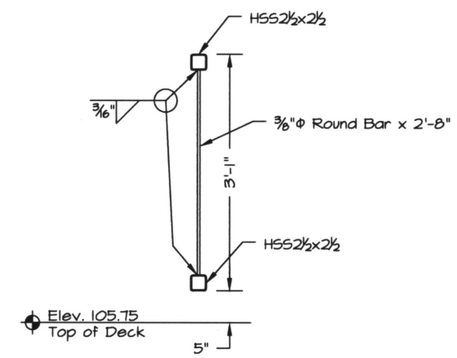

3 / – Typical Railing Section
Scale: ½" = 1'-0"

STATE OF ALASKA
49 TH
Peter A. Giessel
2016-08-07
SE-13666
REGISTERED PROFESSIONAL ENGINEER

Do not scale any critical dimension. Use provided dimensions to derive. If a critical dimension is missing, request clarification from the Engineer of Record.

Plans Developed By:
Giessel Technical Services, Inc.
17450 N Juanita Lp, 99577
(907) 887-6356
AECC1412

STATE OF ALASKA DEPARTMENT OF NATURAL RESOURCES

BYERS LAKE
BYERS LAKE BRIDGE DESIGN
PROJECT No. 78050-2

Pedestrian Railing

ALASKA STATE PARKS

PREPARED: PAG
DRAWN: PAG
REVIEWED: XXX
DATE: 2016-08-07

SHEET 27 OF 28 SHEETS

Note: Each bay of the bridge, fully assembled with guardrail and grating weighs approximately 2,250 lbs. Fully assembled, the truss portion of the bridge with grating and guardrail will weigh approximately 23,000 lbs.

Note: Fully assembled truss with grating, spanning the entire span length can structurally self-support (dead load) prior to tower and cable installation.

With NO environmental loading (NO SNOW, wind or earthquake loading), the truss without the cables may safely support 25 psf live load. Do not overload.

Truss may be slinged in, fully assembled, supported at either the end or first interior bays.

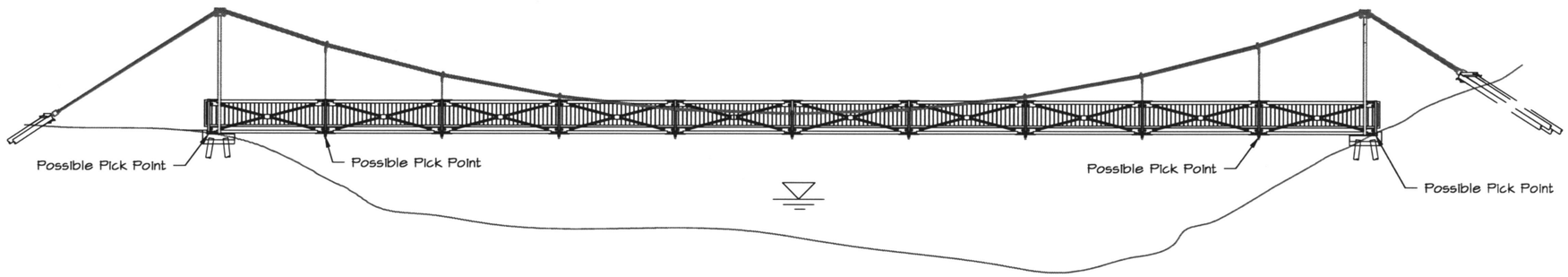

1 – Construction Sequencing Notes
Scale: No Scale

Note: Seven (7) bays of the truss may be assembled as a temporary bridge.

Temporary bridge in this configuration can safely support 90 psf. Do not overload.

Bridge in temporary configuration must be properly supported. Temporary footing design by others.

Truss may be slinged in, fully assembled, supported at either the end or first interior bays.

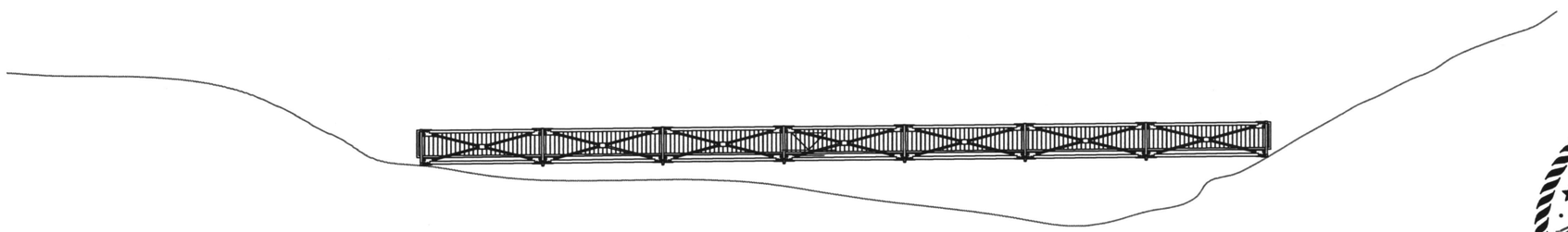

2 – Construction Sequencing Notes
Scale: No Scale

STATE OF ALASKA
49 TH
Peter A. Giessel
2016-08-07
SE-13666
REGISTERED PROFESSIONAL ENGINEER

Do not scale any critical dimension. Use provided dimensions to derive. If a critical dimension is missing, request clarification from the Engineer of Record.

Plans Developed By:
Giessel Technical Services, Inc.
17450 N Juanita Lp, 99577
(907) 887-6356
AECC1412

STATE OF ALASKA DEPARTMENT OF NATURAL RESOURCES

Temporary Configuration Notes

BYERS LAKE
BYERS LAKE BRIDGE DESSIGN
PROJECT No. 78050-2

ALASKA STATE PARKS

PREPARED: PAG
DRAWN: PAG
REVIEWED: XXX
DATE: 2016-08-07

SHEET 28 OF 28 SHEETS