STATE OF ALASKA
DEPARTMENT OF NATURAL RESOURCES
DIVISION OF PARKS AND OUTDOOR RECREATION

BINGS LANDING UNIT, KRSMA
FLOATING DOCK

PROJECT NO. 74056-1

Vicinity Map

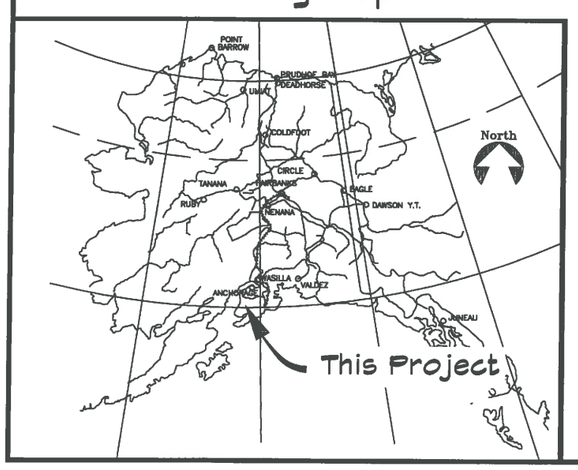

INDEX

TITLE SHEET
1. GENERAL NOTES
2. SITE PLAN
3. DOCK PLAN
4. DOCK PROFILE
5. DOCK + PONTOON SECTIONS / PILE ELEVATIONS
6. GANGWAY DETAILS
7. DETAILS
8. ELP WALKWAY + LIFTING FRAME

The following Division of Parks & Outdoor Rec. standard drawings apply to this project: None
The following D.O.T.(Highways) standard drawings apply to this project: None

STATE OF ALASKA
Department of Natural Resources
Division of Parks & Outdoor Recreation

Recommended:

Rys Miranda — 11/7/16 Date
Chief, Design and Construction

Approved:

Ben Ellis — 11/7/2016 Date
Director, Alaska State Parks

GENERAL NOTES

GENERAL
ALL MATERIALS AND CONSTRUCTION SHALL CONFORM TO REQUIREMENTS OF THE INTERNATIONAL CODE COUNCIL INTERNATIONAL BUILDING CODE (IBC) 2009 EDITION. WHERE EXPLICIT DETAILS ARE NOT SHOWN OR DESCRIBED, THE MINIMUM REQUIREMENTS OF THE ABOVE CODE SHALL APPLY. UNLESS OTHERWISE NOTED, ALL CODES, STANDARDS AND OTHER PUBLICATIONS CITED SHALL REFER TO THE LATEST EDITION.

STRUCTURAL STEEL
STRUCTURAL STEEL SHALL CONFORM TO IBC CHAPTER 22, FOR ASTM SPECIFICATION A-36, FY = 36 K.S.I. EXCEPT WHERE NOTED OTHERWISE. HOLLOW SECTION STEEL (HSS) TUBING SHALL CONFORM TO ASTM A500, GRADE B, FY = 46 K.S.I. DESIGN, FABRICATION AND ERECTION SHALL BE IN ACCORDANCE WITH THE IBC CHAPTER 22, DIVISION IX, ALLOWABLE STRESS DESIGN. ALL WELDING SHALL CONFORM TO AMERICAN WELDING SOCIETY D1.1. WELD ALL FAYING SURFACES WITH CONTINUOUS 1/4" FILLET WELD (MINIMUM) UNLESS OTHERWISE NOTED. ALL ELECTRODES SHALL HAVE A MINIMUM YIELD STRENGTH OF 70 KSI. ALL STEEL SHALL BE PRIMED & PAINTED TO PAINTING SPECIFICATIONS.

STRUCTURAL ALUMINUM AND CONNECTORS
STRUCTURAL ALUMINUM SHALL CONFORM TO IBC CHAPTER 20. ALL PLATES, AND SHAPES SHALL CONFORM TO ASTM SPECIFICATION 6061-T6, EXCEPT WHERE NOTED OTHERWISE. PONTOON PLATE SHALL CONFORM TO ASTM SPECIFICATION 5052 H32, EXCEPT WHERE NOTED OTHERWISE. DESIGN, FABRICATION AND ERECTION SHALL BE IN ACCORDANCE WITH THE IBC CHAPTER 20, ALLOWABLE STRESS DESIGN. ALL WELDING SHALL CONFORM TO AMERICAN WELDING SOCIETY D1.2. WELD ALL FAYING SURFACES WITH CONTINUOUS 3/16" FILLET WELD (MINIMUM) UNLESS OTHERWISE NOTED. FILLER METAL SHALL BE ER 5356 FILLER MATERIAL.

STAINLESS STEEL CONNECTORS AND PLATES
STAINLESS STEEL BOLTS, NUTS, AND WASHERS SHALL BE 316 SERIES STAINLESS STEEL BOLTS EXCEPT WHERE NOTED OTHERWISE. ALL BOLTS SHALL MEET F5934. ALL NUTS SHALL BE HEAVY HEX HEAD NUTS AND SHALL CONFORM TO ASTM F594. STAINLESS STEEL PLATE SHALL CONFORM TO ASTM SPECIFICATION 304.

WINCH
WINCH TO BE PROVIDED BY OWNERS. MOUNT AND OPERATE WINCH PER MANUFACTURER'S RECOMMENDATIONS. THE MAXIMUM APPLIED LINE FORCE IS 2,400 LBS.

FIBERGLASS GRATING
ALL GRATING SHALL BE GATOR DECK PULTRUDED FIBERGLASS GRATING OR ENGINEER APPROVED EQUAL. 1" THICK GRATING SHALL BE SERIES I-4010 DECKING 1½" THICK GRATING SHALL BE SERIES I-4015 DECKING. ALL GRATING SHALL BE ATTACHED TO THE SUBSTRUCTURE W/ CLIPS & STAINLESS SELF DRILLING & TAPPING SCREWS PROVIDED BY MANUFACTURER.

GRIP TAPE
ALL GRIP TAPE SHALL BE SAFETY TRACK ANTI-SKID TAPE, COMMERCIAL GRADE OR ENGINEER APPROVED EQUAL. GRIP TAPE SHALL BE PLACED ON AND COVER ALL EXPOSED ALUMINUM WALKING SURFACES. INSTALL ALL GRIP TAPE PER THE MANUFACTURER'S RECOMMENDATIONS.

ALUMINUM CLEATS
ALL ALUMINUM CLEATS SHALL BE FRASER BRONZE FOUNDRY, INC ITEM # FR 001.85 WELD-ON DECK CLEATS OR ENGINEER APPROVED EQUAL. ALL CLEATS SHALL BE WELDED TO PERIMETER ALUMINUM RECTANGULAR TUBE WITH CONTINUOUS ¼" FILLET WELD.

HEAVY DUTY ALUMINUM PIANO HINGES
ALL HEAVY DUTY PIANO HINGES SHALL BE PIANO TYPE CONTINUOUS HINGE- NO HOLES WITH FULL HARD ALUMINUM PINS. HINGES SHALL BE MADE OF 5052-H32 ALUMINUM. HINGE PLATES SHALL BE A MINIMUM OF 1-1/16" LONG BY 0.040" THICK WITH 0.09" DIAMETER PIN.

PILE FOUNDATIONS
ALL FOUNDATION PILES SHALL CONFORM TO THE REQUIREMENTS OF IBC CHAPTER 18, SOILS AND FOUNDATIONS. PILES SHALL BE DRIVEN BELOW FINISH GRADE TO MINIMUM DEPTHS INDICATED ON THE DRAWINGS. THE MINIMUM ALLOWABLE CAPACITY PER 6" PILE IS 6 TONS. ALL PILES SHALL BE DRIVEN WITH EITHER VIBRATORY OR IMPACT HAMMERS.

1. PROVIDE PILE DRIVING RECORDS INCLUDING:
   A. SIZE, LENGTH, AND LOCATIONS OF PILES.
   B. SEQUENCE OF DRIVING.
   C. NUMBER OF BLOWS PER FOOT, FOR EACH FOOT, FOR FINAL 3 FEET OF DRIVING.
   D. IDENTIFY DRIVING CONDITIONS FOR EACH PILE: OBSTRUCTIONS OR OTHER ANOMALIES.
   E. FINAL PILE TIP AND TOP CUTOFF ELEVATIONS
   F. DRIVING ENERGY OF PILE HAMMER.

PILE FOUNDATIONS (CONTINUED)
2. PROVIDE STEEL MILL CERTIFICATIONS FOR COMPLIANCE, AND TEST RESULTS.

3. PILES AND PILE CAP MATERIAL:
   A. ASTM A 53 GRADE B STANDARD STEEL PIPE, MINIMUM 35KSI YIELD STRENGTH.
   B. SIZE: 8" SCHEDULE 80.
   6" SCHEDULE 40.

4. PILE TIPS: PROVIDE CONICAL POINT PILE TIPS IF DRIVING CONDITIONS PREVENT DRIVING PILES TO REQUIRED MINIMUM DEPTHS AND CAPACITIES WITHOUT DAMAGE.

5. INSTALLATION:
   A. MIMIMUM EMBEDMENT LENGTH SHOWN IS DEPTH BELOW FINISH GRADE.
   B. INSTALL PILES WITHOUT PRE-DRILLING, PROVIDED THAT DRIVING RESISTANCE DOES NOT RESULT IN DAMAGE TO PILE.
   C. PROVIDE FULL LENGTH PIPE WITH MAXIMUM OF 1 SPLICE. ALL SPLICES SHALL BE FULL PENETRATION WELDED.
   D. DO NOT DAMAGE PILES DURING DRIVING.
   E. PROVIDE RESTRAINING DEVICES AS REQUIRED TO MAINTAIN PILE ALIGNMENT.
   F. CUT OFF PILES TO ACHIEVE ELEVATION INDICATED AND PREPARE PILE TOP TO RECEIVE PILE CAP.

6. TOLERANCES:
   A. VARIATION FROM VERTICAL: 1 IN 200.
   B. TOP CUT OFF ELEVATION: MAXIMUM 0.125 INCH.
   C. HORIZONTAL LOCATION: MAXIMUM 1.0 INCH.

7. FIELD QUALITY CONTROL: CONSULT WITH ENGINEER TO VERIFY PILE BEARING CAPACITY WITH ENGINEERING NEWS RECORD FORMULA USING BLOW COUNTS OBTAINED DURING DRIVING OF PILE.

8. UNACCEPTABLE PILES:
   A. PILES THAT FAIL TESTS, ARE PLACED OUT OF POSITION, BELOW CUTOFF ELEVATION, DAMAGED, OR THAT DO NOT MEET THE MINIMUM BEARING CAPACITY REQUIREMENT.
   B. PROVIDE ADDITIONAL PILES OR REPLACE PILES TO CONFORM TO SPECIFIED REQUIREMENTS.

PAINTING
ALL STEEL EXCEPT GALVANIZED, SHALL BE SHOP PAINTED AND PRIMED. PAINT COLOR SHALL BE 'RUSSET BROWN'. A COLOR SAMPLE SHALL BE SUBMITTED TO OWNER FOR REVIEW PRIOR TO PAINTING. PRIMER SHALL BE RUST-OLEUM PRIMER WITH PETIT 'EASYPOXY' POLYURETHANE FINISH OR OWNER APPROVED EQUAL. PILES AND PILE CAPS SHALL BE PRIMED AND PAINTED WITH ONE COAT OF BRUSH APPLIED POLYURETHANE ENAMEL AFTER INSTALLATION. ALL FIELD WELDS ON 6" PILES SHALL BE PRIMED AND PAINTED.

STATE OF ALASKA
MICHAEL J. DOWNEY
CE-12469
05/31/16
Registered Professional Engineer

NO.	REVISION	DATE
1	DNR COMMENTS	11/01/16

NELSON ENGINEERING
CONSULTING ENGINEERS
STRUCTURAL/CIVIL
155 BIDARKA ST
KENAI, AK 99611
TEL. (907) 283 - 3583
NELSONENGINEER@ALASKA.NET

BINGS LANDING FLOATING DOCK
ALASKA STATE PARKS
STERLING, ALASKA
NOTES & SPECIFICATIONS

PROJECT NO. 1602
DRAWN BY: ZSR
CHECKED BY: MJD
DATE: 05/31/16
SCALES: NOTED
HORIZ. NOTED
VERT. NOTED
SHEET 1
1 OF 8

PILE SCHEDULE						
#	TYPE	EASTING	NORTHING	DEPTH	T.O. PILE ELEV.	E.G. ELEV.
1	8" SCH 40	1,513,638.76	2,380,996.54	18' MIN	178.09'	166.09'
2	8" SCH 40	1,513,727.61	2,381,005.91	18' MIN	178.09'	167.77'
3	6" SCH 40	1,513,722.95	2,381,028.92	15' MIN	174.75'	NA
4	6" SCH 40	1,513,724.10	2,381,023.54	15' MIN	174.75'	NA
5	6" SCH 40	1,513,728.51	2,381,030.11	15' MIN	174.75	NA
6	6" SCH 40	1,513,729.66	2,381,024.73	15' MIN	174.92'	NA
7	6" SCH 40	1,513,735.48	2,381,031.61	15' MIN	174.92'	NA
8	6" SCH 40	1,513,737.54	2,381,026.51	15' MIN	174.92'	NA

CONTROL POINT				
POINT #	EASTING	NORTHING	ELEV.	DESCRIPTION
711	1,513,873.76'	2,381,085.58'	175.26'	FOUND PLASTIC CAP ON REBAR
712	1,513,965.43'	2,381,229.90'	183.42'	FOUND PLASTIC CAP ON REBAR
8538	1,513,869.18'	2,381,376.18'	216.46'	VERTICAL CHECK SET 104[1]

NOTES:
1) POINT 104 WITH SIMILAR NORTHING & EASTING IS LISTED ON THE CONTROL SHEET FOR ASP PROJECT #74032-1 AS: "CP 104, SET 5/8" REBAR WITH 2" AC"

SURVEY DATA
NEW & EXISTING DOCK LOCATIONS ARE BASED ON ASBUILT SURVEY DATA. PROVIDED BY ALASKA STATE PARKS. THE ASBUILT SURVEY WAS REPORTEDLY PREFORMED 9/4/2014. THE LIST OF CONTROL POINTS WAS TAKEN FROM THE LIST OF SURVEYED POINTS PROVIDED WITH THE SURVEY DATA, & MAY BE USED TO LOCATE THE NEW STRUCTURE.

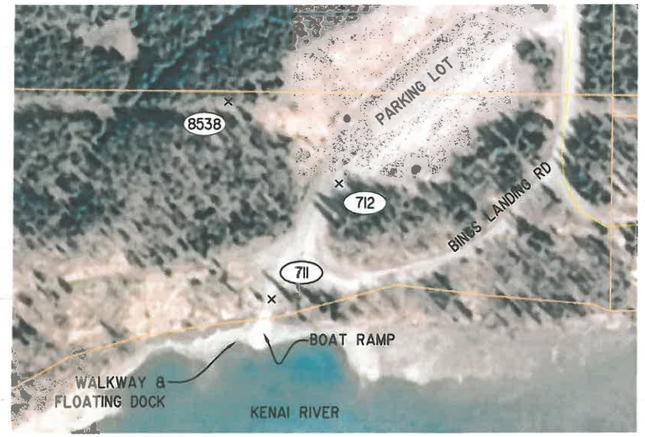

B/2 CONTROL POINT PLAN
SCALE: NTS

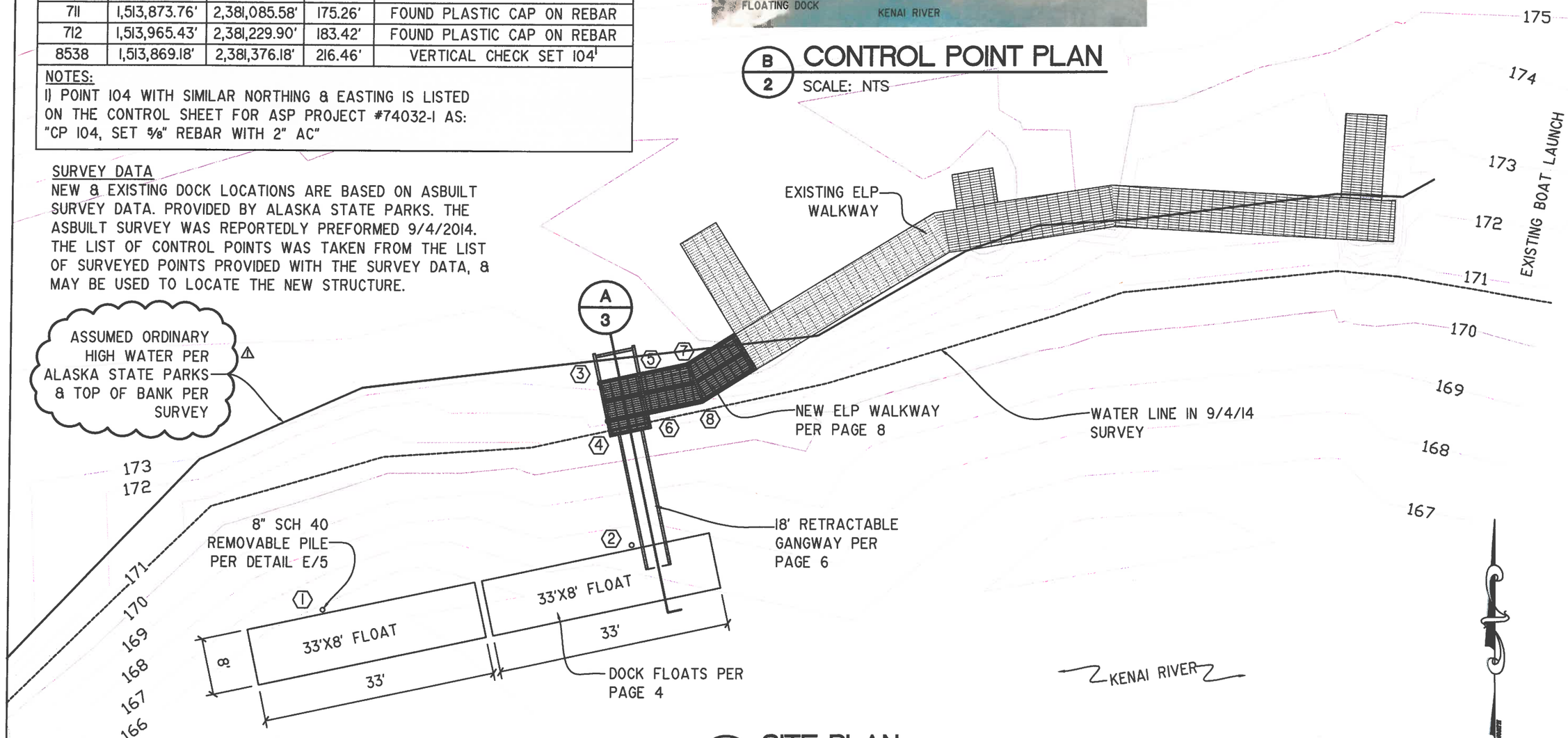

A/2 SITE PLAN
SCALE: 1"=15'

STATE OF ALASKA
MICHAEL J. DOYLE
CE-12487
05/31/16
Registered Professional Engineer

NO.	REVISION	DATE
1	DNR COMMENTS	06/30/16

CONSULTING ENGINEERS
STRUCTURAL/CIVIL
155 BIDARKA ST
KENAI, AK 99611
TEL. (907) 283 - 3583
NELSONENGINEER@ALASKA.NET
NELSON

BINGS LANDING FLOATING DOCK
ALASKA STATE PARKS
STERLING, ALASKA
SITE PLAN

PROJECT NO. 1602
DRAWN BY: ZSR
CHECKED BY: MJD
DATE: 05/31/16
SCALES: NOTED
HORIZ. NOTED
VERT. NOTED
SHEET 2
2 OF 8

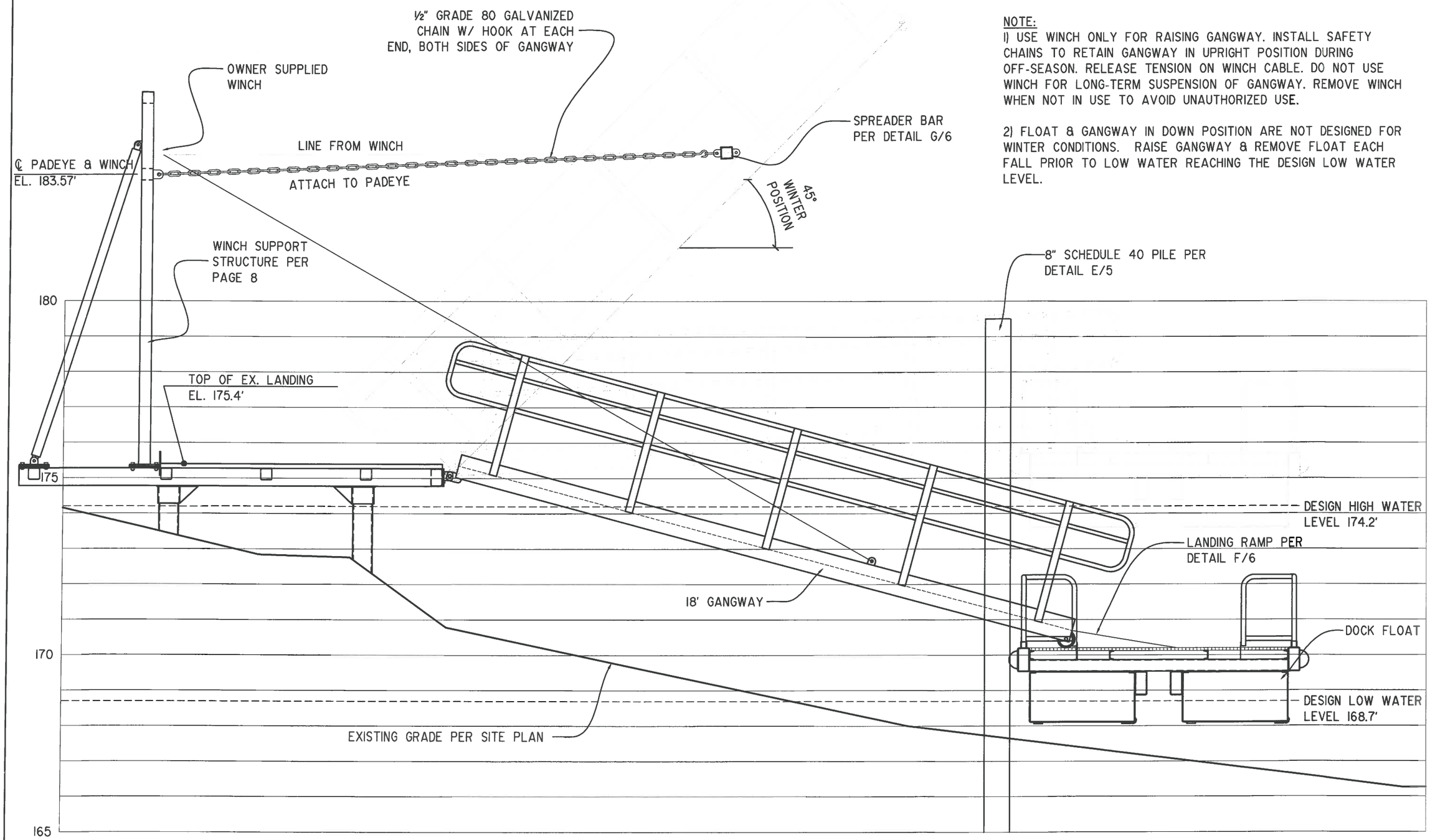

A/3 GANGWAY PROFILE
SCALE: 3/8" = 1'-0"

NOTE:
1) USE WINCH ONLY FOR RAISING GANGWAY. INSTALL SAFETY CHAINS TO RETAIN GANGWAY IN UPRIGHT POSITION DURING OFF-SEASON. RELEASE TENSION ON WINCH CABLE. DO NOT USE WINCH FOR LONG-TERM SUSPENSION OF GANGWAY. REMOVE WINCH WHEN NOT IN USE TO AVOID UNAUTHORIZED USE.

2) FLOAT & GANGWAY IN DOWN POSITION ARE NOT DESIGNED FOR WINTER CONDITIONS. RAISE GANGWAY & REMOVE FLOAT EACH FALL PRIOR TO LOW WATER REACHING THE DESIGN LOW WATER LEVEL.

STATE OF ALASKA 9TH MICHAEL JAMES DOWLING CE-12469 05/31/16 Registered Professional Engineer

NO.	REVISION	DATE

CONSULTING ENGINEERS
STRUCTURAL/CIVIL
155 BIDARKA ST
KENAI, AK 99611
TEL. (907) 283 - 3583
NELSONENGINEER@ALASKA.NET
NELSON ENGINEERING

BINGS LANDING FLOATING DOCK
ALASKA STATE PARKS
STERLING, ALASKA
DOCK PROFILE

PROJECT NO. 1602
DRAWN BY: ZSR
CHECKED BY: MJD
DATE: 05/31/16
SCALES: NOTED
HORIZ. NOTED
VERT. NOTED
SHEET 3
3 OF 8

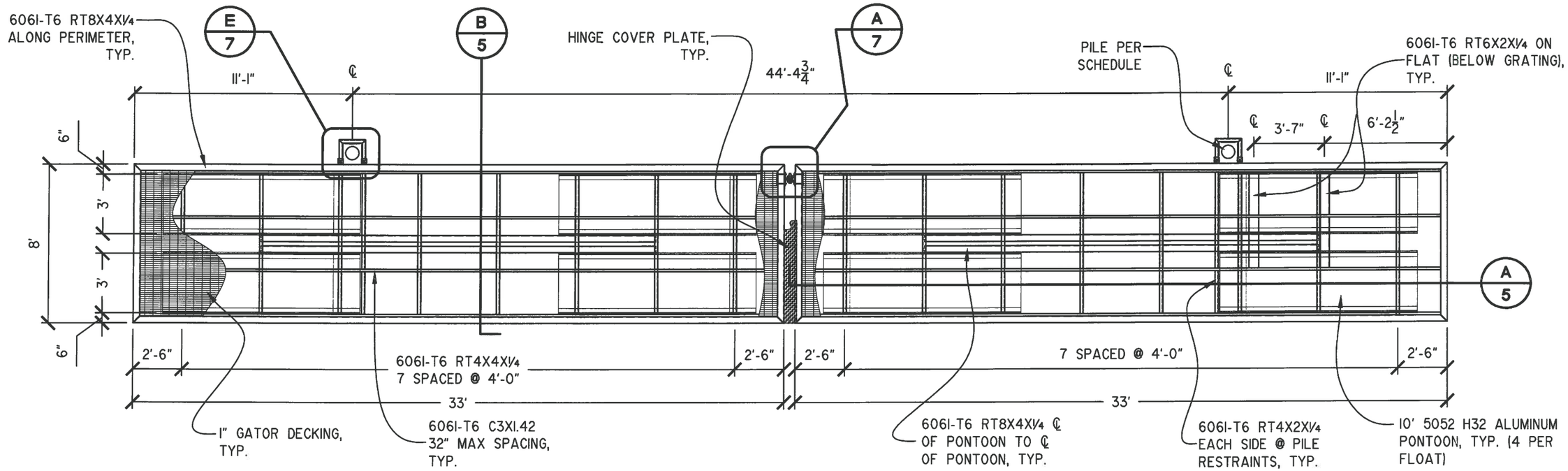

A/4 DOCK PLAN

SCALE: 3/16"=1'-0"

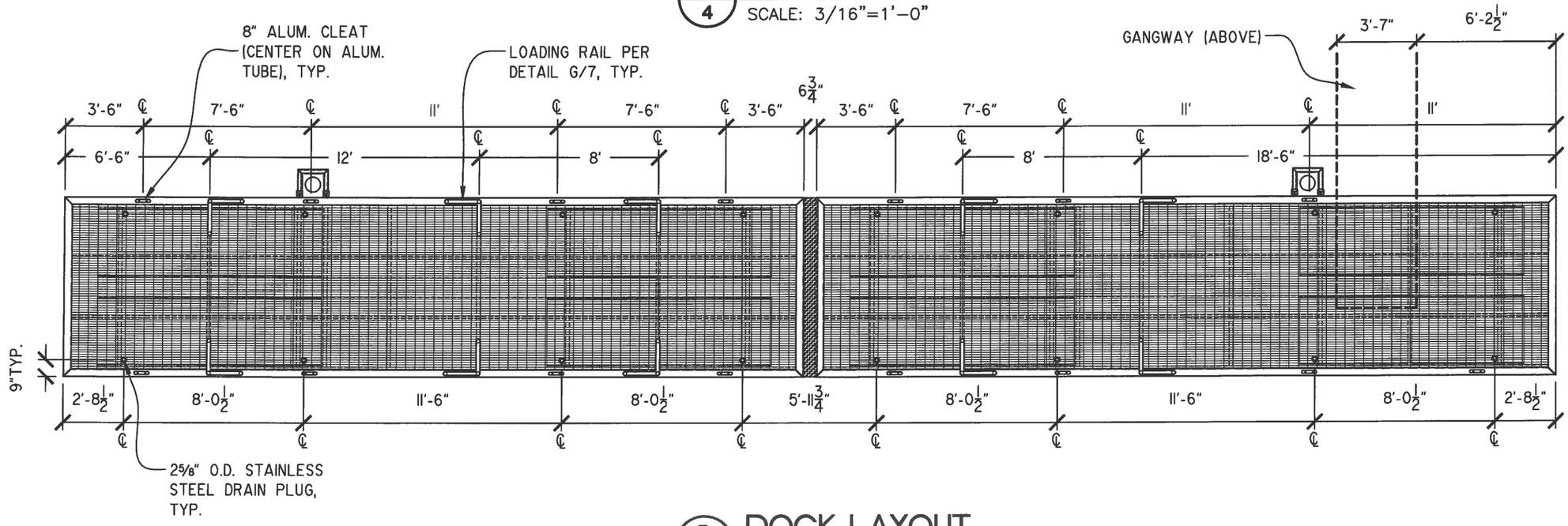

B/4 DOCK LAYOUT

SCALE: 3/16"=1'-0"

STATE OF ALASKA
MICHAEL J. DOYLE
CE-12497
05/31/16
Registered Professional Engineer

NO.	REVISION	DATE

CONSULTING ENGINEERS
STRUCTURAL/CIVIL
155 BIDARKA ST
KENAI, AK 99611
TEL. (907) 283 - 3583
NELSONENGINEER@ALASKA.NET
NELSON ENGINEERING

BINGS LANDING FLOATING DOCK
ALASKA STATE PARKS
STERLING, ALASKA
DOCK PLAN

PROJECT NO. 1602
DRAWN BY: ZSR
CHECKED BY: MJD
DATE: 05/31/16
SCALES: NOTED
HORIZ. NOTED
VERT. NOTED
SHEET 4
4 OF 8

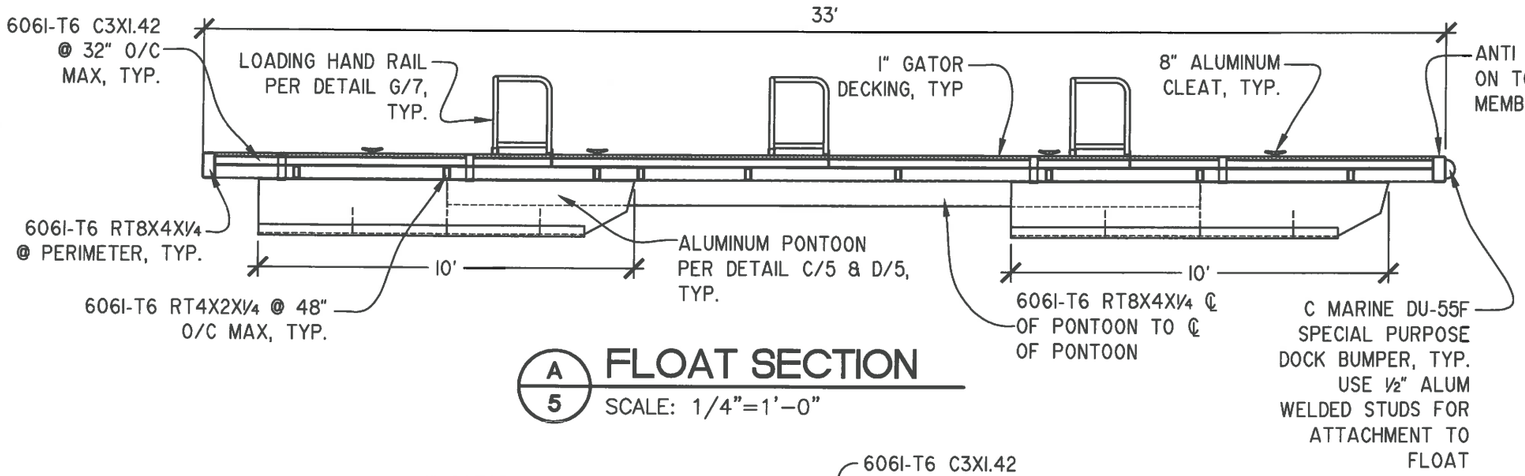

A/5 FLOAT SECTION
SCALE: 1/4"=1'-0"

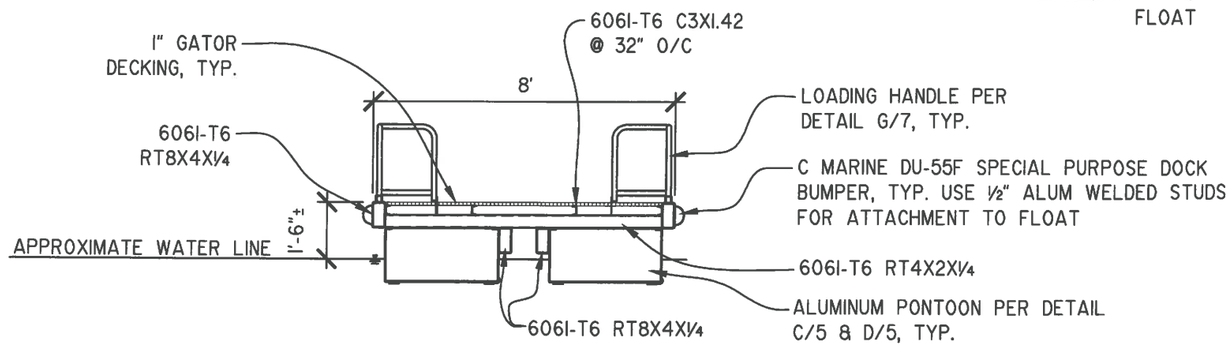

B/5 FLOAT SECTION
SCALE: 1/4"=1'-0"

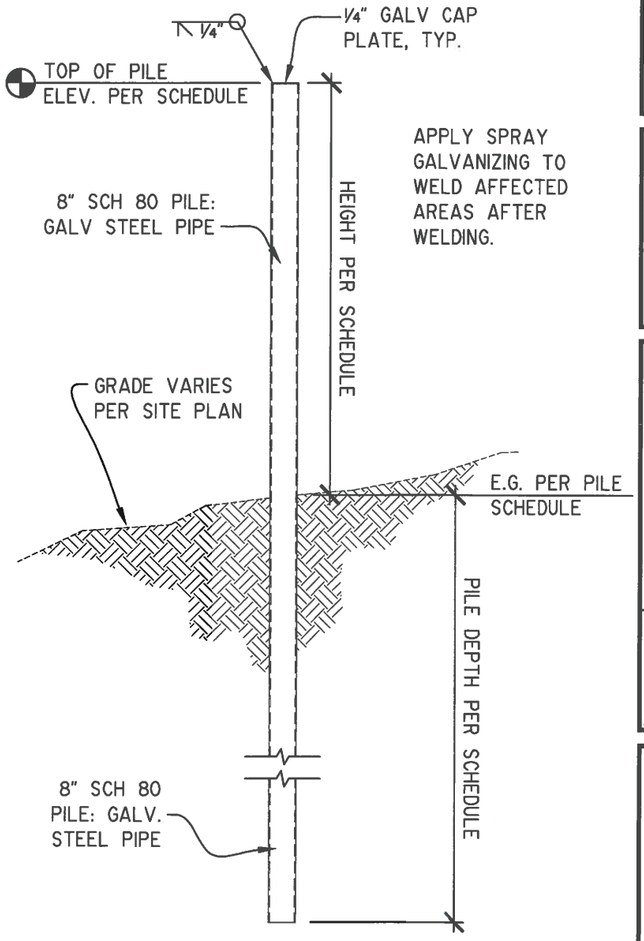

E/5 PILE ELEVATION
SCALE: 1/4"=1'-0"

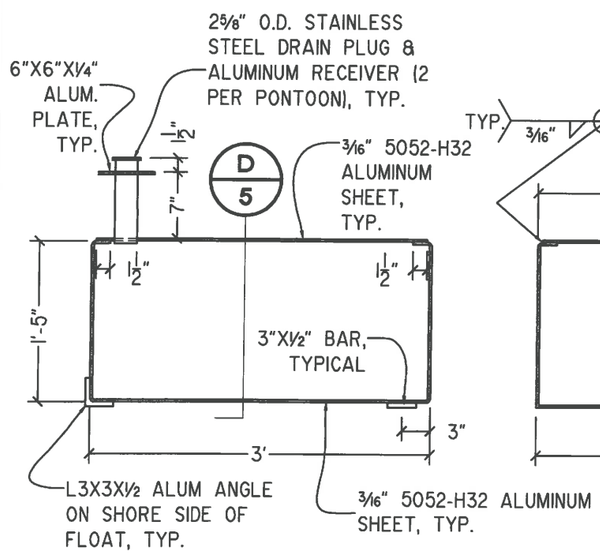

C/5 PONTOON SECTION
SCALE: 3/4"=1'-0"

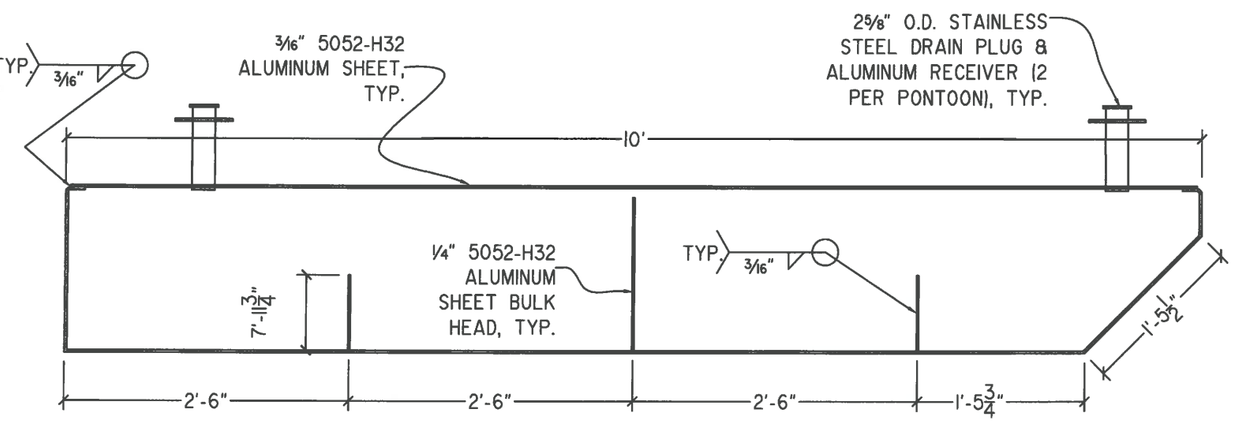

D/5 PONTOON SECTION
SCALE: 3/4"=1'-0"

STATE OF ALASKA — MICHAEL J. DOYLE — CE-12497 — 05/31/16 — Registered Professional Engineer

NO.	REVISION/ COMMENTS	DATE
1	DNR COMMENTS	11/01/16

CONSULTING ENGINEERS
STRUCTURAL/CIVIL
155 BIDARKA ST
KENAI, AK 99611
TEL. (907) 283 - 3583
NELSONENGINEER@ALASKA.NET
NELSON ENGINEERING

BINGS LANDING FLOATING DOCK
ALASKA STATE PARKS
STERLING, ALASKA
PONTOON SECTION / PILE ELEVATION

PROJECT NO. 1602
DRAWN BY: ZSR
CHECKED BY: MJD
DATE: 05/31/16
SCALES: NOTED
HORIZ. NOTED
VERT. NOTED
SHEET 5
5 OF 8

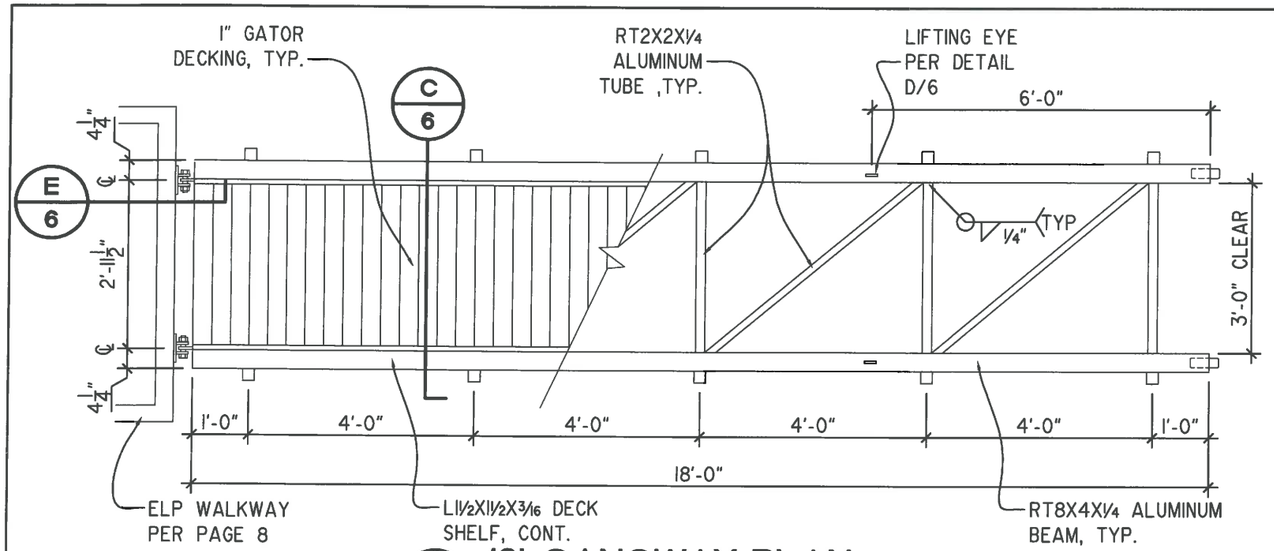

A 6 18' GANGWAY PLAN

SCALE: 3/8"=1'-0"

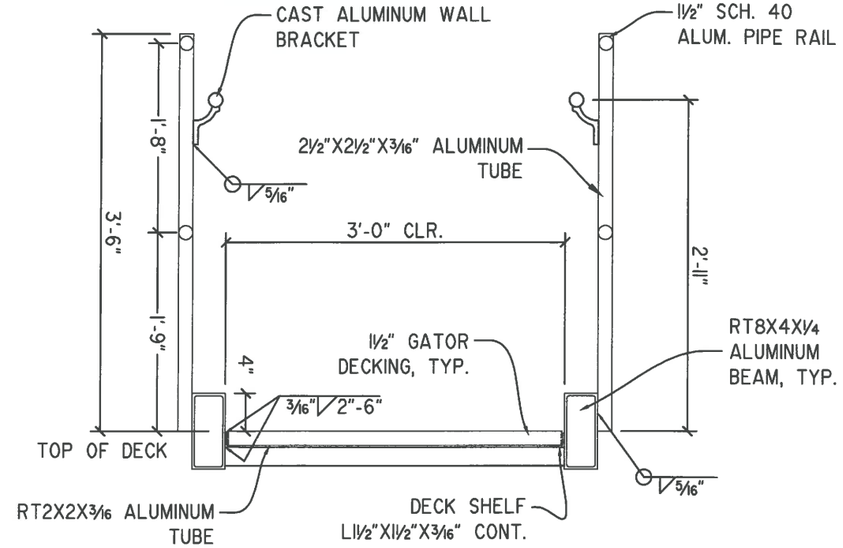

C 6 GANGWAY SECTION

SCALE: 3/4"=1'-0"

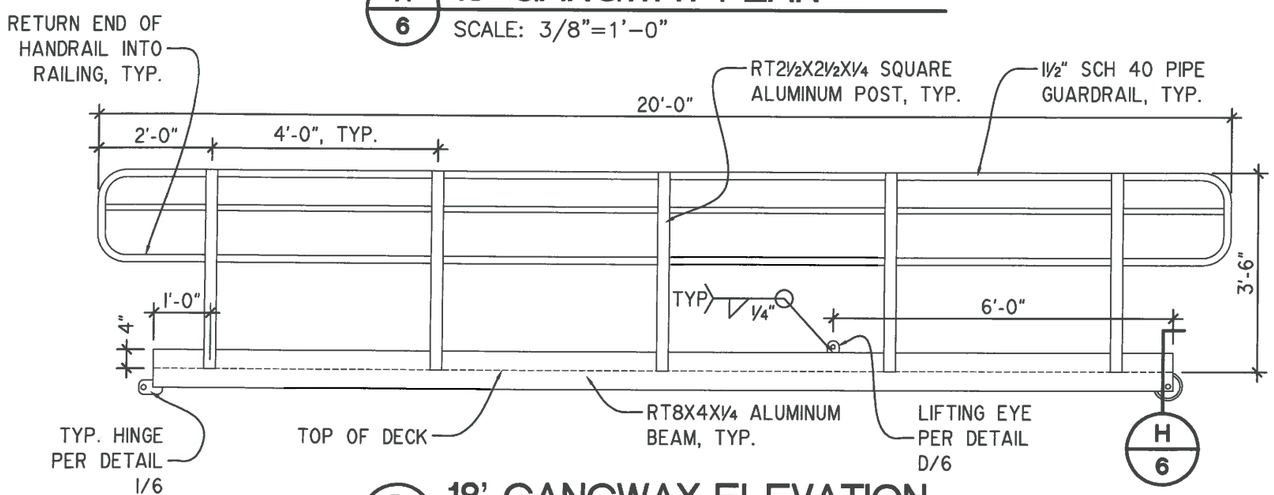

B 6 18' GANGWAY ELEVATION

SCALE: 3/8"=1'-0"

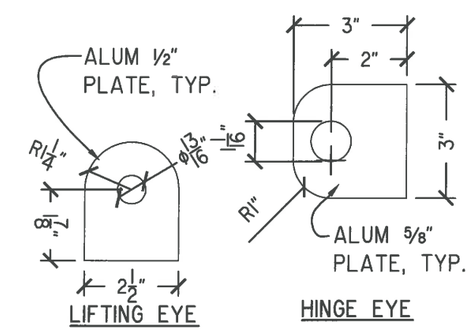

D 6 TYP. PAD EYE

SCALE: 3"=1'-0"

NOTE: COPE BOX BEAM ENDS TO FIT AROUND WHEEL

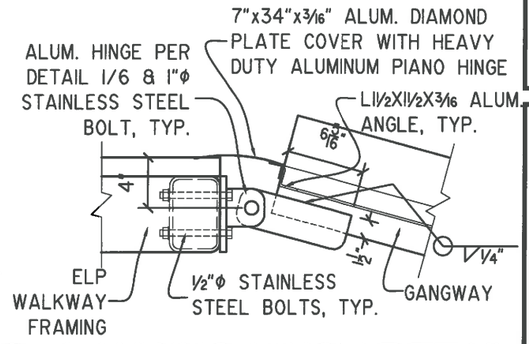

E 6 LANDING HINGE DETAIL

SCALE: 1"=1'-0"

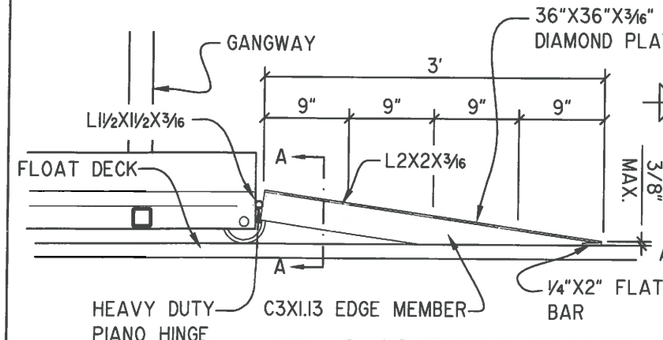

F 6 LANDING RAMP

SCALE: 3/4"=1'-0"

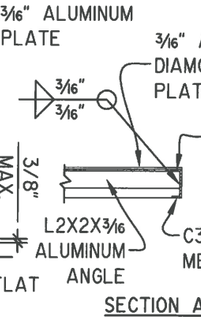

SECTION A-A

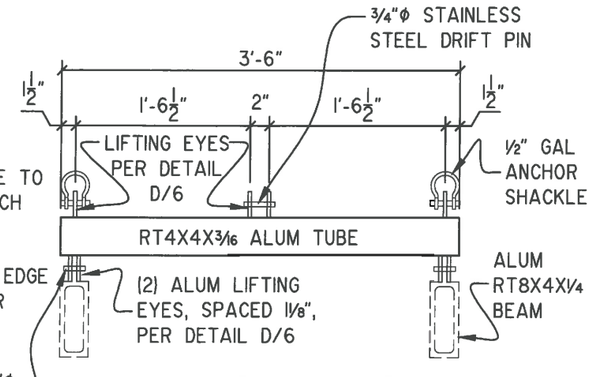

G 6 SPREADER BAR

SCALE: 3/4"=1'-0"

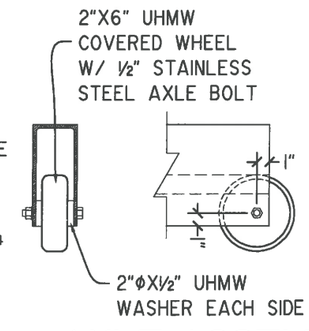

H 6 AXLE ASSEMBLY

SCALE: 1"=1'-0"

NOTE: DO NOT SLOT HOLES IN 18' GANGWAY HINGES

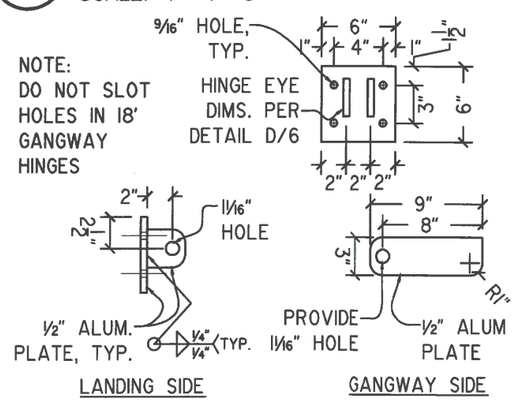

I 6 HINGE PLATES

SCALE: 1"=1'-0"

STATE OF ALASKA 19TH MICHAEL J. DOYLE CE-12497 05/31/16 Registered Professional Engineer

NO.	REVISION	DATE

CONSULTING ENGINEERS
STRUCTURAL/CIVIL
155 BIDARKA ST
KENAI, AK 99611
TEL. (907) 283 - 3583
NELSONENGINEER@ALASKA.NET
NELSON ENGINEERING

BINGS LANDING FLOATING DOCK
ALASKA STATE PARKS
STERLING, ALASKA
GANGWAY PLAN & SECTION

PROJECT NO. 1602
DRAWN BY: ZSR
CHECKED BY: MJD
DATE: 05/31/16
SCALES: NOTED
HORIZ. NOTED
VERT. NOTED
SHEET 6
6 OF 8

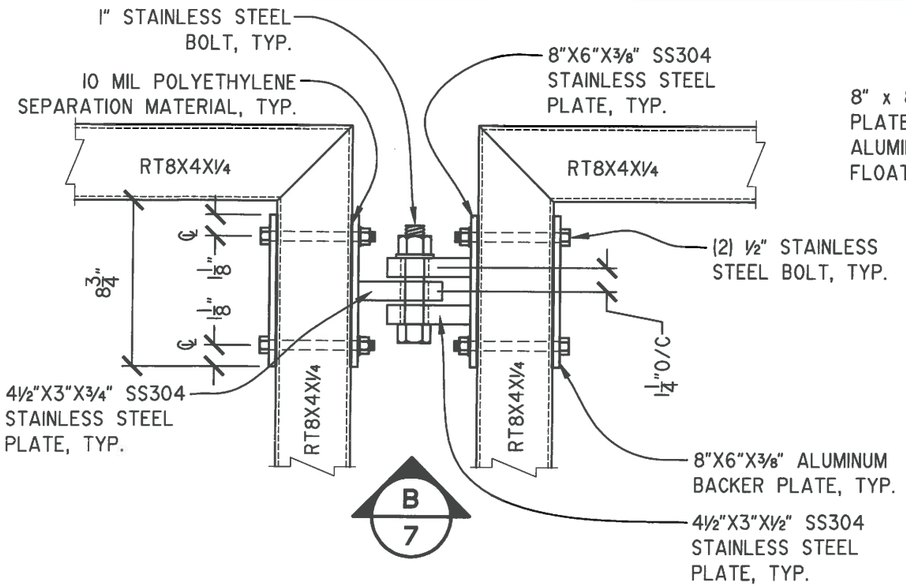

A/7 TYP. HINGE CONNECTION

SCALE: 1-1/2"=1'-0"

NOTE:
PROVIDE COVER PLATE AT EACH HINGE CONNECTION, TYP.

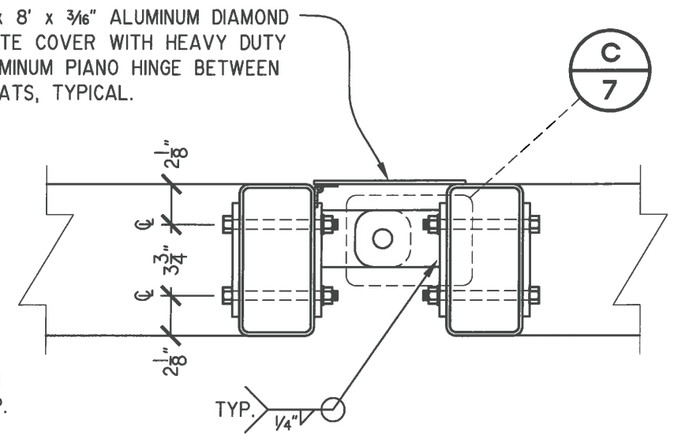

B/7 TYP. HINGE SECTION

SCALE: 1-1/2"=1'-0"

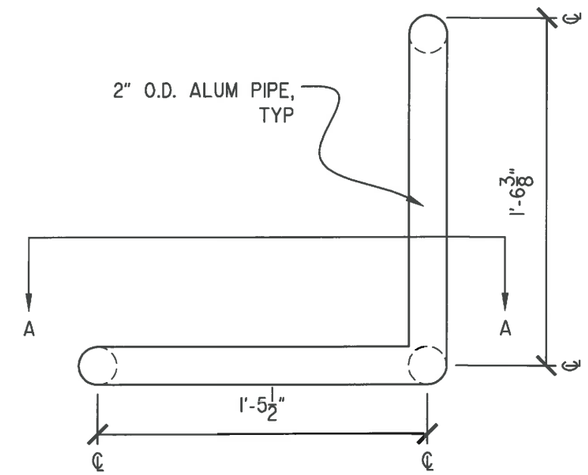

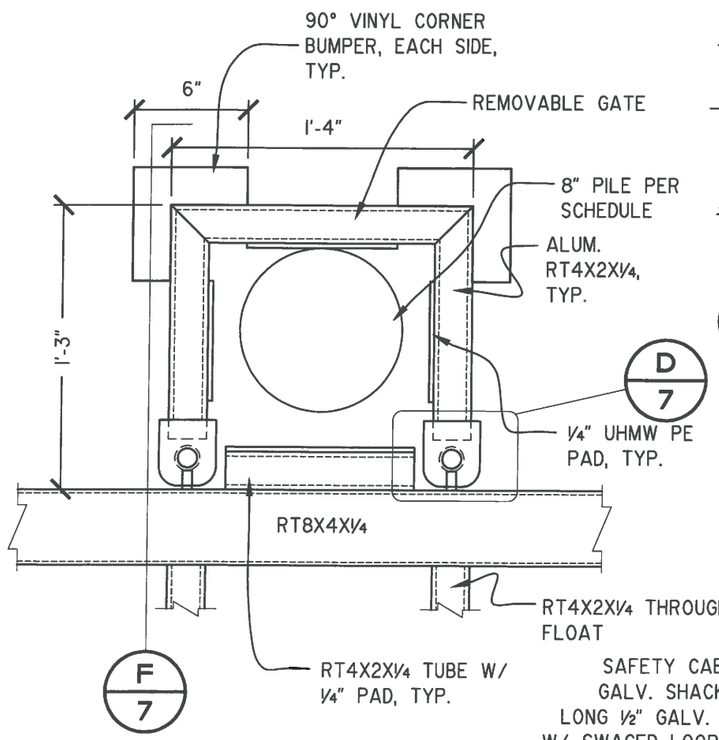

E/7 REMOVABLE PILE GATE

SCALE: 1-1/2"=1'-0"

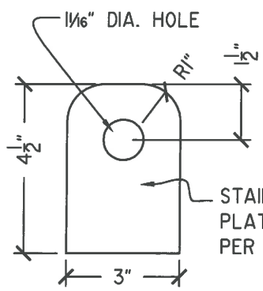

C/7 HINGE PLATE

SCALE: 3"=1'-0"

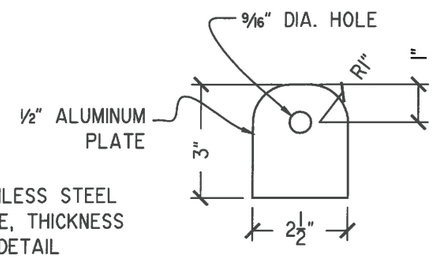

D/7 PADEYE

SCALE: 3"=1'-0"

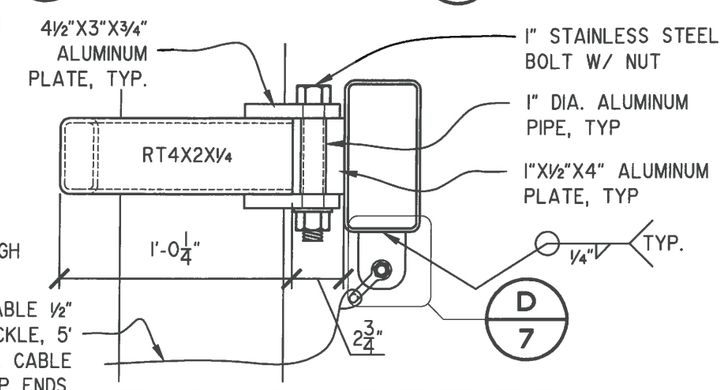

F/7 REMOVABLE PILE GATE SECTION

SCALE: 1-1/2"=1'-0"

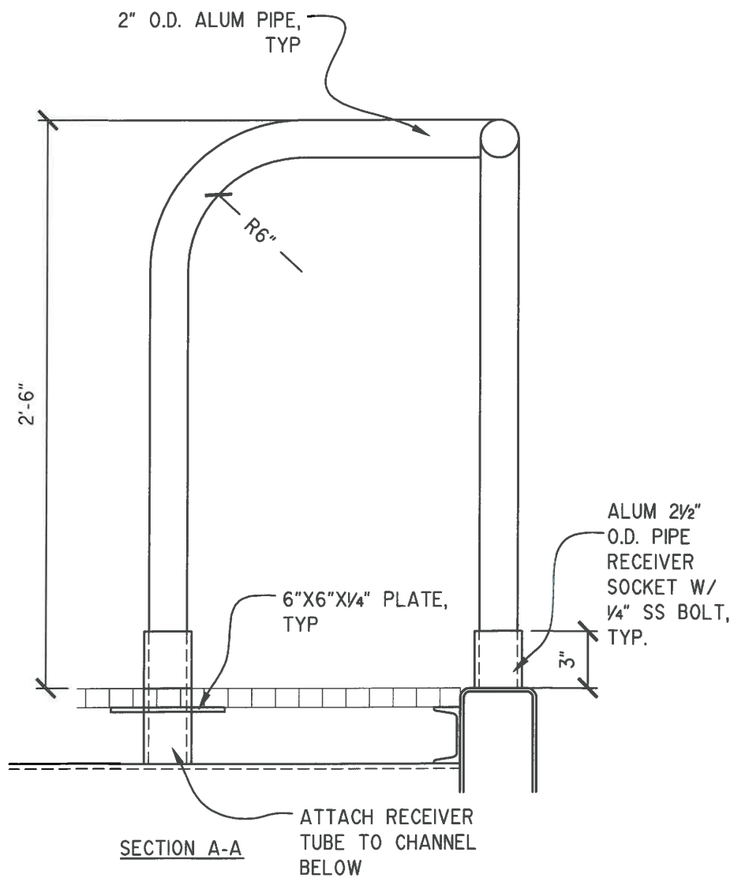

G/7 LOADING HAND RAIL

SCALE: 1-1/2"=1'-0"

STATE OF ALASKA
MICHAEL J. DOUGHTY
CE-12987
05/31/16
Registered Professional Engineer

NO.	REVISION	DATE

CONSULTING ENGINEERS
STRUCTURAL/CIVIL
155 BIDARKA ST
KENAI, AK 99611
TEL. (907) 283 - 3583
NELSONENGINEER@ALASKA.NET
NELSON ENGINEERING

BINGS LANDING FLOATING DOCK
ALASKA STATE PARKS
STERLING, ALASKA
DETAILS

PROJECT NO. 1602
DRAWN BY: ZSR
CHECKED BY: MJD
DATE: 05/31/16
SCALES: NOTED
HORIZ. NOTED
VERT. NOTED
SHEET 7
7 OF 8

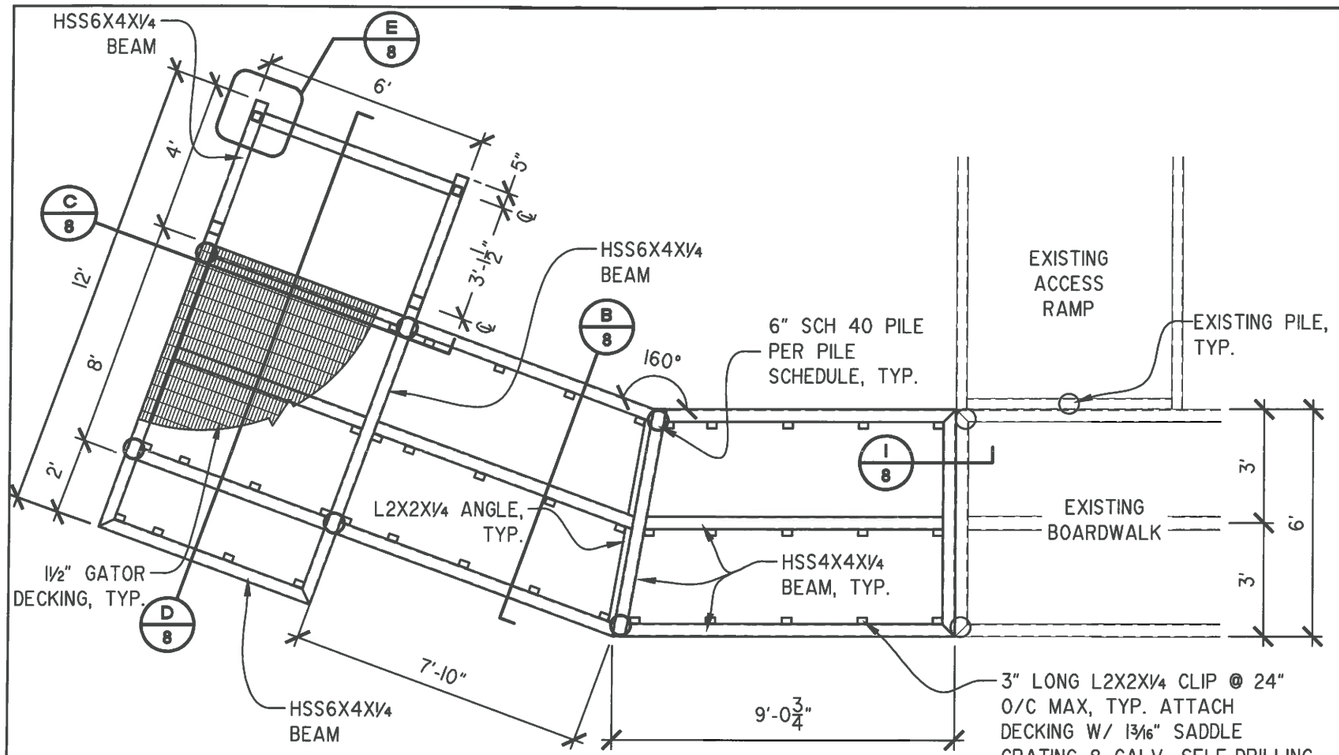

A/8 ENLARGED ELP WALKWAY PLAN

SCALE: 1/4"=1'-0"

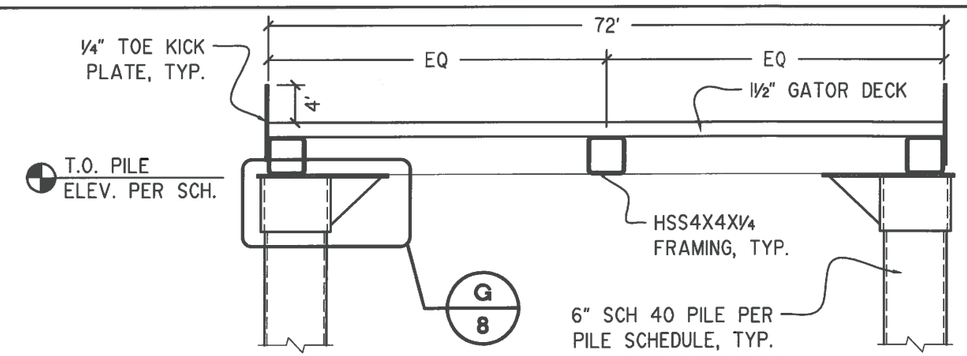

B/8 ELP WALKWAY SECTION

SCALE: 3/4"=1'-0"

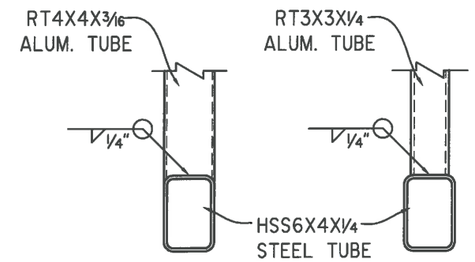

LIFTING FRAME POST LIFTING FRAME BRACE

E/8 LIFTING FRAME ATTACHMENT

SCALE: 1"=1'-0"

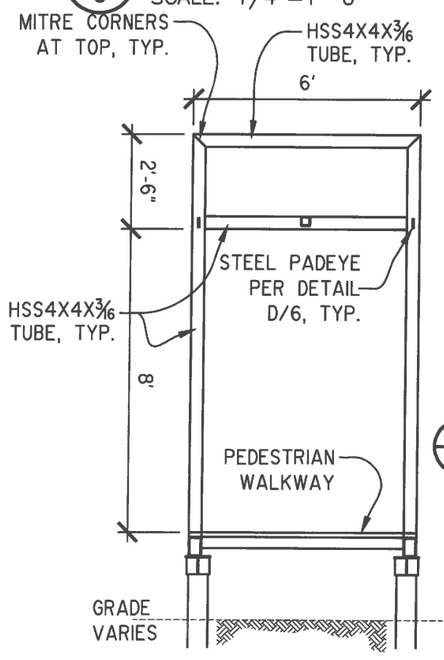

C/8 LIFTING FRAME ELEVATION

SCALE: 1/4"=1'-0"

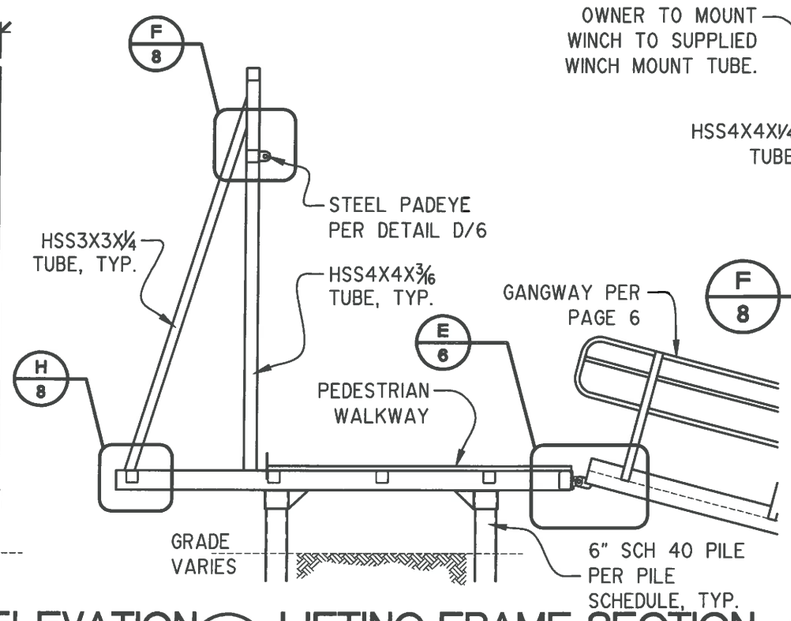

D/8 LIFTING FRAME SECTION

SCALE: 1/4"=1'-0"

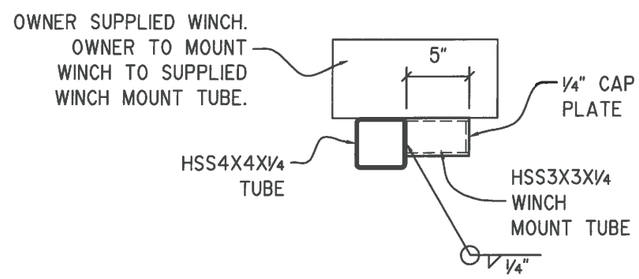

F/8 WINCH MOUNT

SCALE: 1"=1'-0"

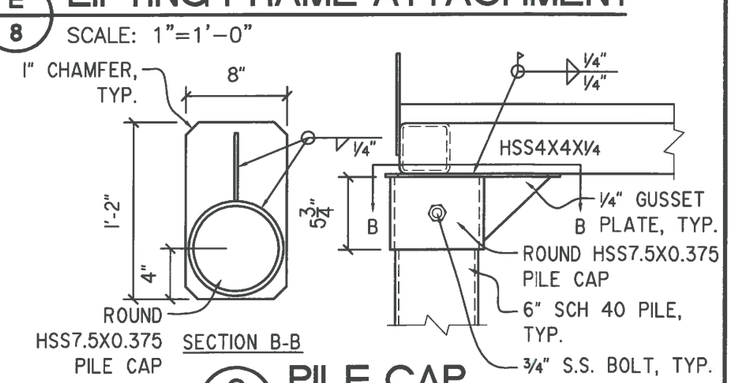

G/8 PILE CAP

SCALE: 1"=1'-0"

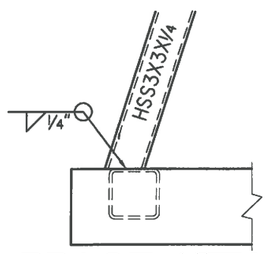

H/8 BRACE ATTACHMENT

SCALE: 1"=1'-0"

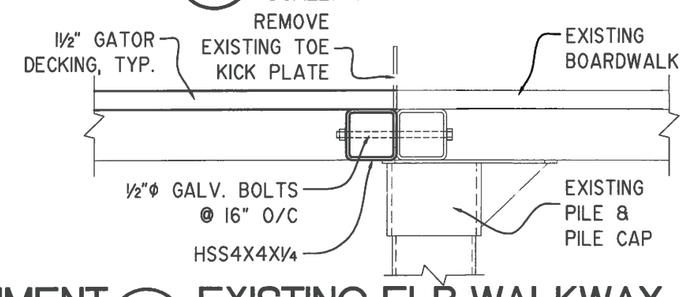

I/8 EXISTING ELP WALKWAY

SCALE: 1"=1'-0"

STATE OF ALASKA
MICHAEL J. DOBRY
CE-12687
05/31/16
Registered Professional Engineer

NO.	REVISION	DATE

CONSULTING ENGINEERS
STRUCTURAL/CIVIL
155 BIDARKA ST
KENAI, AK 99611
TEL. (907) 283 - 3583
NELSONENGINEER@ALASKA.NET
NELSON ENGINEERING

BINGS LANDING FLOATING DOCK
ALASKA STATE PARKS
STERLING, ALASKA
GANGWAY PLAN & SECTION

PROJECT NO. 1602
DRAWN BY: ZSR
CHECKED BY: MJD
DATE: 05/31/16
SCALES: NOTED
HORIZ. NOTED
VERT. NOTED
SHEET 8
8 OF 8